ORDER NO.KM69010343C2

# Service Manual

Printer

## KX-P1123

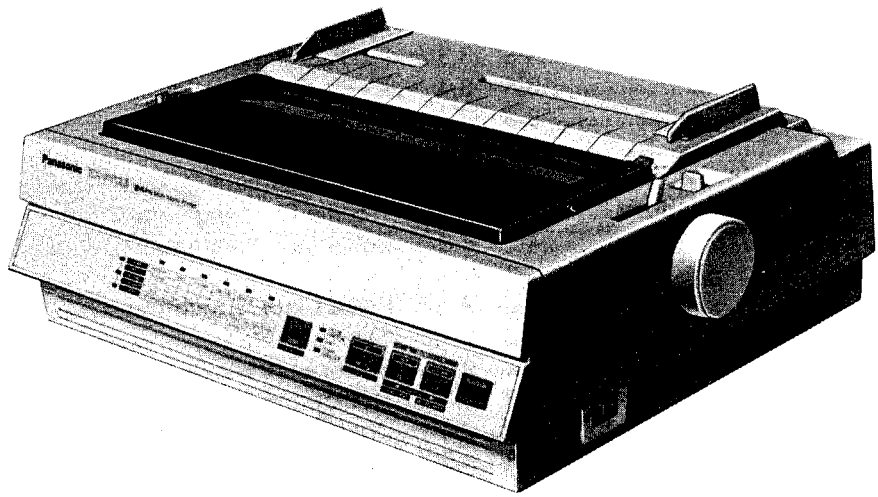

Panasonic

**Matsushita Electric Industrial Co., Ltd.**
Central P.O. Box 288, Osaka 530-91, Japan

# TABLE OF CONTENTS


**1. Specifications** ..... 1-1

**2. Operator Controls/Indicators** ..... 2-1

**3. Settings of Controls** ..... 3-1
3.1 Print Mode ..... 3-1
3.1.1 Micro Line Feed ..... 3-1
3.1.2 Memo Load ..... 3-1
3.1.3 Self Test Print ..... 3-1
3.1.4 Hex.Dump Print ..... 3-1
3.2 Function Mode ..... 3-2
3.2.1 Function Chart ..... 3-2
3.2.2 Printing Margin ..... 3-2
3.2.3 Factory Mode ..... 3-2
3.2.4 Macro Memory ..... 3-3
3.2.5 Perforation Cut ..... 3-3
3.2.6 Top of the Form ..... 3-3
3.3 Initial Set Up Mode ..... 3-4

**4. Removal and Replacement Procedure** ..... 4-1
4.1 Covers ..... 4-1
4.2 Printing Mechanism ..... 4-1
4.3 Main Board ..... 4-2
4.4 Power Transformer and Power Supply ..... 4-2
4.5 Printhead ..... 4-2
4.6 Carriage Assembly ..... 4-3
4.7 Platen Assembly ..... 4-3
4.8 Tractor Assembly ..... 4-3

**5. Adjustment** ..... 5-1
5.1 Head Gap ..... 5-1
5.2 Print Timing ..... 5-2

**6. Mechanical Function** ..... 6-1
6.1 Carriage Drive System ..... 6-1
6.1.1 Power Transmission Mechanism ..... 6-1
6.1.2 Print Timing ..... 6-1
6.1.3 Home Position Detector Mechanism ..... 6-1
6.1.4 Ink Ribbon Cassette Drive Mechanism ..... 6-2
6.2 Paper Thickness Selection ..... 6-2
6.3 Printhead ..... 6-3
6.3.1 Power Transmission Mechanism ..... 6-3
6.3.2 Printhead Pin Operation ..... 6-3
6.4 Paper Feed Mechanism ..... 6-3
6.4.1 Power Transmission Mechanism ..... 6-3
6.4.2 Paper Feed Mode ..... 6.4
6.5 End of Paper Detectors ..... 6-5
6.6 Paper Load ..... 6-5

**7. Electronic Circuit Block Diagram** ..... 7-1

**8. Electronic Circuit Descriptions** ..... 8-1
8.1 Principle of Operation ..... 8-1
8.2 Circuitry ..... 8-1
8.2.1 Power Supply Block ..... 8-1
8.2.2 CPU,Gate Array and Peripheral Circuit Block ..... 8-4
8.2.3 Parallel Interface Circuit ..... 8-9
8.2.4 Carriage Motor Drive Block ..... 8-10
8.2.5 Paper Feed Motor Drive Block ..... 8-11
8.2.6 Head Drive Block ..... 8-12
8.2.7 Sensor and Switch Circuits ..... 8-14
8.2.8 Control Panel ..... 8-15
8.2.9 Logic Board Connection Diagram ..... 8-16
8.3 Explanation of Connectors ..... 8-17
8.3.1 Name of Connectors ..... 8-17
8.3.2 Pin Assignment ..... 8-17
8.4 IC Pin Configuration ..... 8-20
8.4.1 Logic Symbol Chart ..... 8-20
8.4.2 Pin Configuration ..... 8-20
8.4.3 Pin Assignment ..... 8-21
8.5 Trouble Shooting Flow Chart ..... 8-24
8.6 Schematic Diagram ..... 8-32

**9. Parts List Lubrication** ..... 9-1
9.1 Cabinet ..... 9-1
9.2 Power Supply ..... 9-3
9.3 Tractor and Carriage ..... 9-4
9.4 Chassis ..... 9-6
9.5 Main Board ..... 9-9
9.6 Control Panel ..... 9-14
9.7 Sensors and Head Relay Terminal ..... 9-15



IBM and IBM-PC are registered trademarks of International Business Machines Corp.

IBM Proprinter II is a trademark of International Business Machines Corp.

LQ-850 is a trademark of Seiko Epson Corp.

# 1. Specifications

Power requirements: AC220V/50Hz, AC240V/50Hz
Current: Idle: 0.1A ; Maximum 1.5A
Print mode: Draft, Letter Quality (Courier, Prestige, Bold PS, Script),Dot Graphics
Character sets: 96ASCII characters,96 Italic ASCII characters,32International Characters (13 countries),32 Itaric International characters (13 countries). 158 IBM Special characters sets 1&2
Dot configuration: Dot Diameter: 1/127 inch (0.2 mm)

| | | Draft (PICA) | LQ |
|---|---|---|---|
| Dot Alignment (H x V) | | 9x24 | 30x24 |
| Dot Pitch | (H) | 1/120" | 1/360" |
| | (V) | 1/180" | 1/180" |

Character size
Nomal characters: 0.074(W) x 0.097(H) inch (1.89 x 2.46 mm)

Character per line (cpl)
(per inch (25.4 mm) (cpi)):

| | Draft, LQ | Elongated |
|---|---|---|
| Pica | 80 cpl (10cpi) | 40 cpl (5cpi) |
| Elite | 96 cpl (12cpi) | 48 cpl (6cpi) |
| Micron | 120 cpl (15cpi) | 60 cpl (7.5cpi) |
| Compressed | 137 cpl (17cpi) | 68 cpl (8.5cpi) |
| Elite compressed | 160 cpl (20cpi) | 80 cpl (10cpi) |

Print speed:

| | Micron | Elite | Pica |
|---|---|---|---|
| Draft | 240 cps | 192 cps | 160 cps |
| LQ | 53 cps | 63 cps | 53 cps |

Print direction: User selectable
Bidirectional or Unidirectional
New line time: Approx. 100 msec [with 1/6 inch (4.2 mm) line feeding]

Paper feed: Friction and Push/Pull Tractor
Paper used:

| | Width | Weight | Height |
|---|---|---|---|
| Fanfold paper | 4-10 in (102-254mm) | 16-24lbs (When Push) 16-24lbs (When Pull) | ..... |
| Single sheet | 4-11.7 in (102-297mm) | 14-24 lbs. | 5-14.3 in (127-363mm) |

Paper thickness: Total thickness of sheets must be less than 0.013 inch (0.32 mm).
Number of copies: Original plus three non-carbon copies
Storage environment
Temperature: -4°F to 140°F (-20°C to + 60°C)
Humidity: 10-90%RHO
Operating environment: 50°F to 95°F (+10°C to + 35°C)
30-80%RHO
Head service life: 100 milion character (Draft mode)
Ribbon: Specially designed cassette seamless fabric ribbon
Service life: Approximately 3 milion characters (Draft Mode)
Dimensions: 16.7 (W) x 13.4 (D) x 5.2 (H) in. (423 x 341 x 133 mm)
Weight: Approx. 15.7 lbs. (7.1 kg)

Specifications are subject to change without notice.

## 2. Operator Controls/Indicators

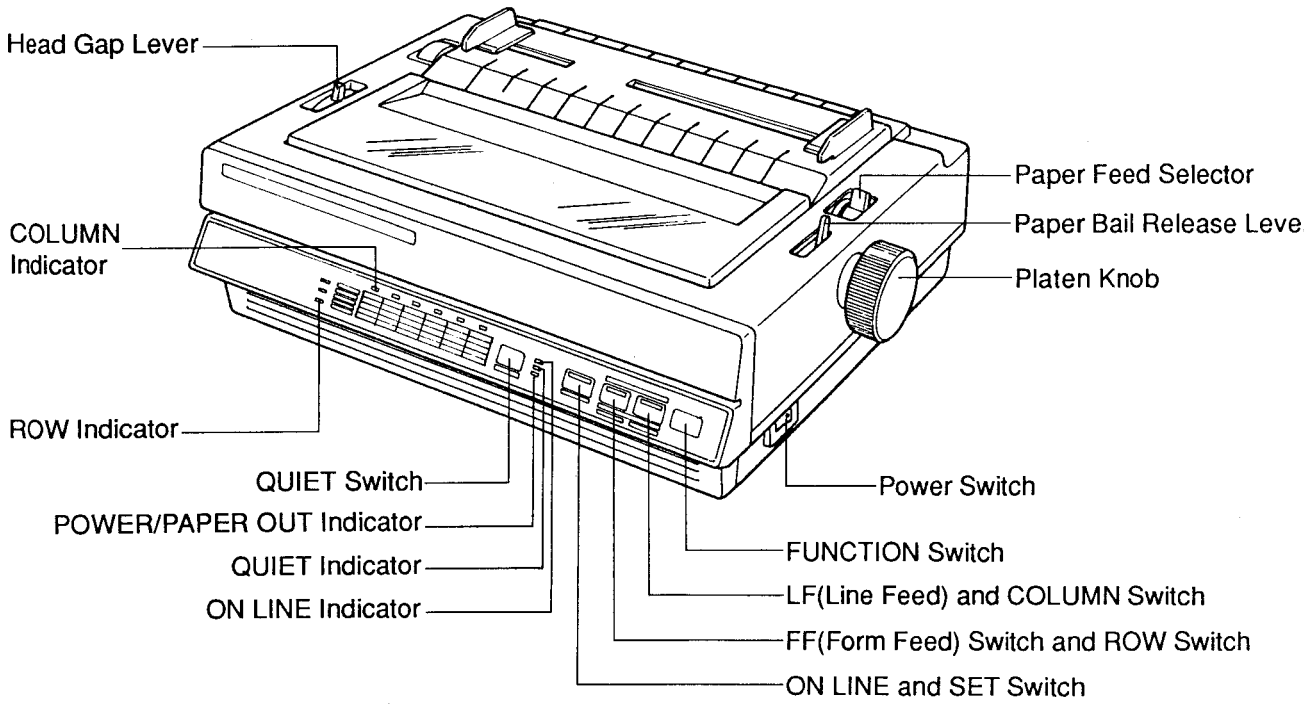


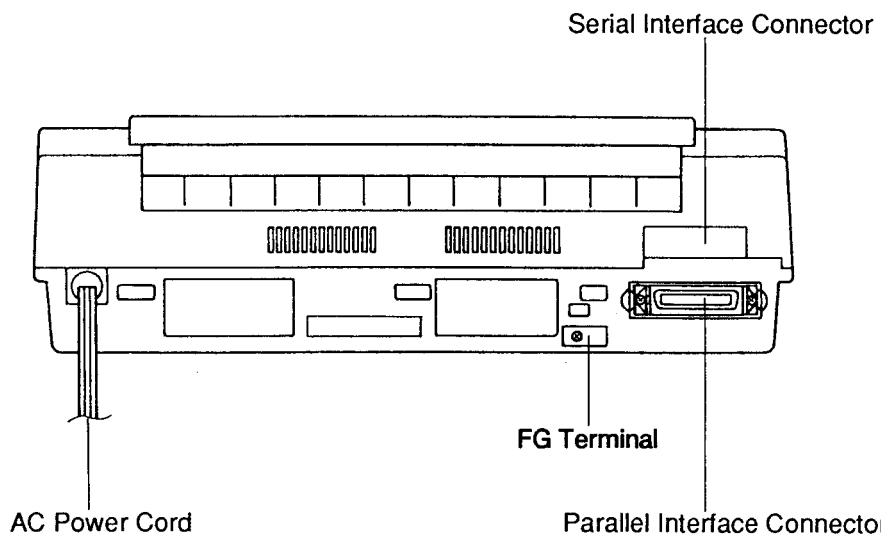

# 3. Setting of Controls

This section covers the basic operation of the printer. For more detailed operation, refer to the operator's manual.

## 3.1 Print Mode

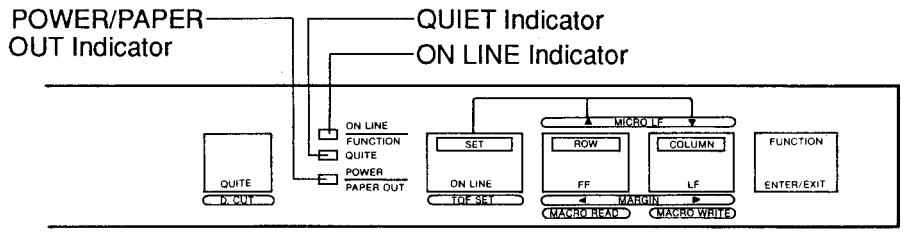


FUNCTION switch: This switch changes printer operation between the print mode and the function mode, as indicated by the ON LINE indicator. When the indicator is lit continuously the print mode is selected, and when the indicator is blinking the function mode is selected.

Line Feed (LF) switch: This switch advances paper one line at a time.

Form Feed (FF) switch: This switch advances paper to the top of the next page.

ON LINE switch: This switch changes the printer operation between on line or off line, as indicated by the ON LINE indicator. When the indicator is lit continuously, the printer is on line.

QUIET switch: This switch lowers printing noise, by performing the even and odd pins printing operation. When the quiet mode is selected, the QUIET indicator is lit.

### 3.1.1 Micro Line Feed

Micro line feed is used to move the paper in increments of 1/180 inch. It is performed by holding the ON LINE switch and simultaneously pressing the LF or FF switch. In this mode, the LF switch backs up paper, and the FF switch advances the paper.

### 3.1.2 Memo Load

The memo load function enables printing on single sheets of paper or envelopes without removing continuous paper. The operating procedure is explained below:

1. Tear off the continuous paper at the perforation.
2. Pull the paper bail lever. The carriage moves to the center of the paper, and continuous paper automatically moves back to the tractor feeder.
3. Position the paper feed selector to "F".
4. Load a single sheet of paper or envelopes by pulling the paper bail lever.
5. After printing is completed, press the FF switch to remove the page, and then reposition the paper feed selector to "T".

**Note:** Memo load only functions correctly when the paper feed selector is the "T" position.

### 3.1.3 Self Test Print

Self test is accessed by holding the LF switch while turning on the printer. First,the ASC II characters of the internal fonts are printed. Next DRAFT print continues for a while. To exit self test,turn off the printer.

### 3.1.4 Hex. Dump Print

Hex dump is accessed by holding both the LF and FF switches while turning on the printer. Data received from the computer will be printed in hexadecimal form. To exit hex dump, turn off the printer.

## 3.2 Function Mode

The function mode is selected by pressing the FUNCTION switch.The ON LINE indicator blinks when in the function mode.
The following functions are selected by using the ROW and COLUMN switches.
After the function is selected, the SET switch enters the function. The COLUMN indicator blinks to show the position of the function. If SET is pressed, the column indicator will light up continuously.

### 3.2.1 Function Chart

| FUNCTION | ROW | COLUMN | | | | | |
|---|---|---|---|---|---|---|---|
| Font | ON | PROGRAM | Draft | Courier | Prestige | Bold PS | Script |
| Pitch | ON ON | PROGRAM | 10 cpi | 12 cpi | 15 cpi | 17 cpi | PS |
| Form Length | ON | 11inch | 12inch | 14inch | 8inch | 8.5inch | 11 2/3 inch |
| Enhancement | ON ON | Bold | Italic | Double Height | Double Width | Double Strike | Centering |
| Other | ON | **Left Margin** | **Right Margin** | **Macro#1** | **Macro#2** | **Macro#3** | **Factory** |
| Print Mode Check | ON ON ON | Present mode can be printed on the paper by pressing the SET switch. | | | | | |

**Note:** The PGM(Program) mode allows software commands to be sent to the printer.
PS (Proportional Spacing) and draft mode cannot be simultaneously selected. If selected together,the buzzer sounds indicating a mismatch.

### 3.2.2 Printing Margin

The left and right margin can be set to the desired positions by the following procedure in the function mode:

1. Select the left (right) margin mode by using the ROW and COLUMN switches.
2. Press the SET switch to enter the left (right) margin set mode.
3. Move the carriage to the desired position by using FF or LF switches.
4. Set the left (right) margin into the memory by pressing the SET switch.

**Note:** When printer enter to left (right) margin set mode, the COLUMN indicator change from blinking to lighting.
The margin can also be set through software commands.

### 3.2.3 Factory Mode

This function is used to set the initial status inputted at factory by following procedures:

1. Select the factory mode by using the ROW and COLUMN switches.
2. Press the SET switch to enter the Factory mode.

### 3.2.4 Macro Memory

Macro memory functions #1,#2 and #3 are used to store a combination of font, pitch, page length, LPI and margin modes into the permanent internal memory by performing Macro write. When the printer is first turned on, Macro #1 is automatically selected. Macro #2 and macro #3 must be selected through the function operation.

**Macro Write**
The macro write function is used to store the mode data into the memory by the following procedures:

1.Set the desired modes as explained in the function mode selection.

2.Select the Macro #1, #2 or #3 by using the ROW and COLUMN switches.

3.Press the SET switch to enter the Macro Write mode.

4.Press the MACRO WRITE(LF) switch and then press the SET switch.

**Macro Read**
The macro read function is used to Load the mode data as stored in memory by the following procedure:

1.Select the desired macro by using the ROW and COLUMN switches.

2.Select the Macro #1, #2 or #3 by using the ROW and COLUMN switches.

3.Press the SET switch to enter the Macro Read mode.

4.Press the MACRO READ(FF) switch and then press the SET switch.

### 3.2.5 Perforation Cut

This function allows tearing continuous paper off at the perforation. When pressed once, the paper advances above the plastic cover for easy paper separation. If SET, ON LINE or FUNCTION is then pressed, the paper moves back to the previous position.

### 3.2.6 Top of the Form

Top of the form function is used to set the top margin the paper. It automatically loads the paper to the desired position. This function can perform three different top margins of the paper for continuous paper, single sheet paper and single sheet paper fed by the cut sheet feeder. The operating procedure is explained below:

1.Insert the paper by pulling the paper bail lever.

2.Adjust the paper position by using the line feed, micro line feed or reverse micro line feed. (Do not use the platen knob for adjustment.)

3.Press the FUNCTION switch and then ON LINE switch.

## 3.3 Initial Set Up Mode

The initial set up mode is entered by holding the FUNCTION switch while turning on the printer.
The ON LINE indicator blinks signifying the initial set up mode is selected.

The following function in a 12 row by 6 column grid are selected by using the ROW and COLUMN switches.
The SET switch is used to enter the function. After selecting the first 6 rows, pressing the ROW switch causes the ROW indicator to blink, indicating setting of the bottom set of functions.
The blinking COLUMN indicator tells the position of the function selected. It stops blinking after pressing the SET switch.

Initial status inputted at factory can be set by pressing the MACRO READ (FF) switch and then press the SET switch.

| FUNCTION | ROW | COLUMN | | | | | |
|---|---|---|---|---|---|---|---|
| Print Mode Check | ON ON ON | Present mode can be printed on the paper by pressing the SET switch. | | | | | |
| Emulation | ON | LQ-850 (EPSON) ITALIC | LQ-850 (EPSON) GRAPHIC | IBM G1 | IBMG2 | ——— | ——— |
| Default Font | ON ON | Draft | Courier | Prestige | Bold PS | Script | ——— |
| International Character Set | ON | U.S.A. | France | Germany | England | Denmark 1 | Sweden |
| | ON ON | Italy | Spain 1 | Japan | Norway | Denmark 2 | Spain 2 |
| | ON | Latin America | Legal | ——— | ——— | ——— | ——— |
| Print Mode Check | BLK BLK BLK | Present mode can be printed on the paper by pressing the SET switch. | | | | | |
| Serial Interface Baud Rate | BLK | Download Buffer (with 32K RAM) | Cut Sheet Feeder | Buzzer ON | Zero Slash OFF | Alternate Graphic Mode ON | Data Length ON=7 bit OFF=8 bit |
| | BLK BLK | ——— | Print Direction | Skip Perforation | Auto LF | Auto CR | P.O Detect ON |
| | * BLK | 150 | 300 | 600 | 1200 | 2400 | 4800 |
| | * BLK BLK | 9600 | ——— | No Parity | Ignore Parity | ODD Parity | EVEN Parity |
| Protocol | * BLK | Protocol ON=XON/X OFF OFF=DTR | Suspend D.T. ON=128byte OFF=512byte | Resume D.T. ON=SDT+128byte OFF=SDT+256byte | S.Polarity ON=Space OFF=Mark | ——— | ——— |

**Note:** The bottom 3 functions (*) are functional only with the interface board KX-PS10 option.

# 4. Removal and Replacement Procedures

For safety and to avoid possible damage to electronic components,the AC line cord must be unplugged before disassembly.

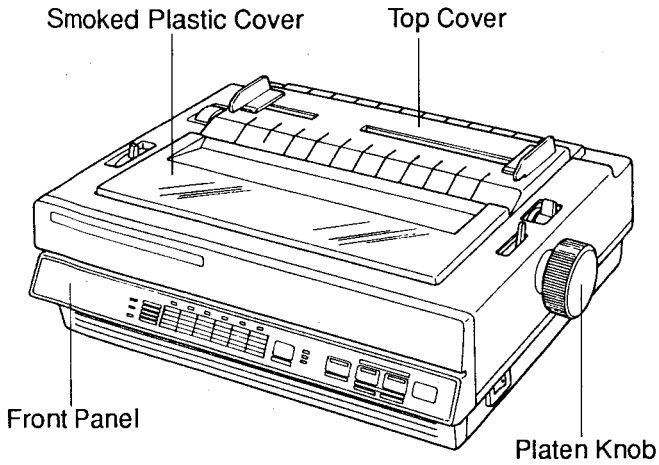


## 4.1 Covers

1. Remove the smoked plastic cover and the top cover.
2. Remove the platen knob.
3. Remove the upper cabinet by following procedure.
4. Raise the unit and insert a screwdriver into the bottom openings. Pry the screwdriver to release the hooks,and then separate the upper cabinet from the bottom cabinet.
5. Remove the front panel by releasing the connector cable.

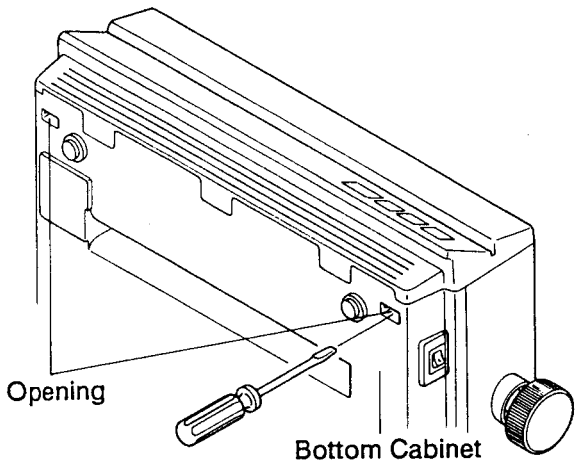


## 4.2 Printing Mechanism

1. Unplug the sensor connectors (CN5,CN6,CN7, CN8,CN9).
2. Position the carriage on left side and unplug the print head flat cable from the connector by removing the cable cover.

**Note:**To remove the cable, first pry the cable cover off with a screwdriver. Be careful not to damage the cable.

3. Remove the screws (2) from the chassis.
4. Raise the front of the chassis and release the chassis rear hook then unplug the motor connectors (CN10, CN11).
5. Lift off the printing mechanism.

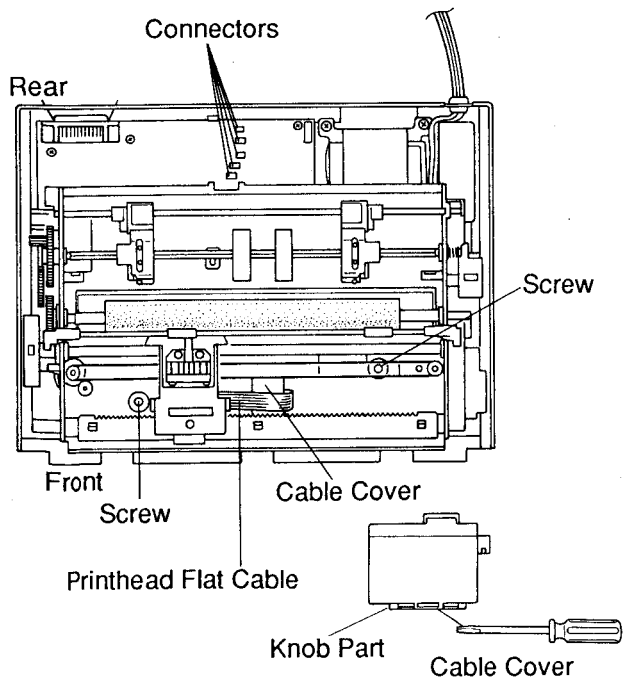

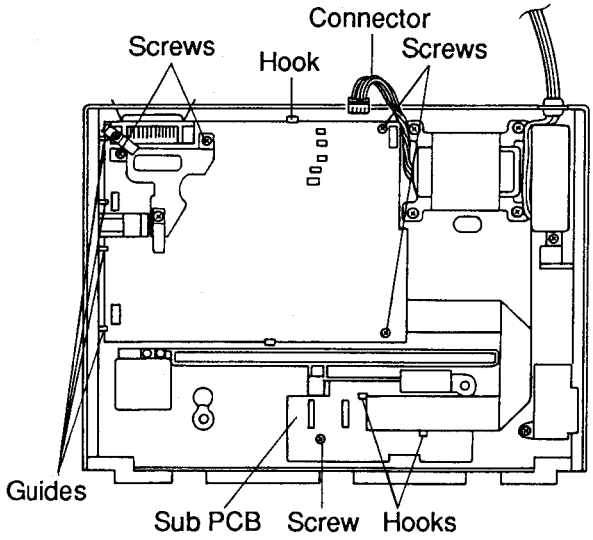


## 4.3 Main Board

1. Unplug the connector (CN1) on main PCB.
2. Remove the screw on sub PCB and remove the sub PCB by releasing 2 hooks.
3. Remove the screw (4) from the main PCB.
4. Release the hook with little raising the main PCB end at transformer side and little slide the main PCB to transformer side then remove the main PCB.

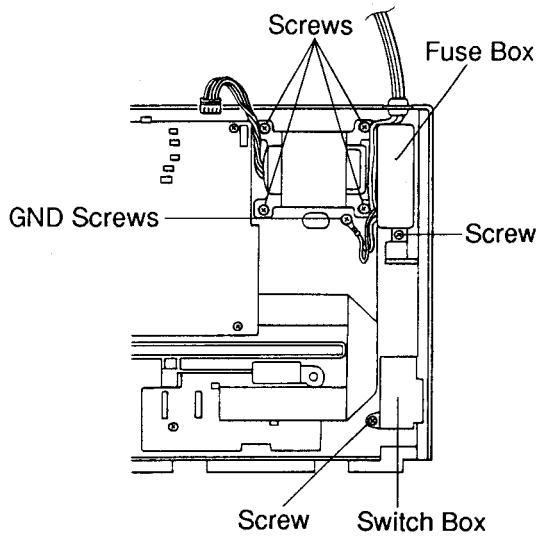


## 4.4 Power Transformer and Power Supply

1. Unplug the connector (CN501) from the primary power PCB.
2. Remove the 4 screws from the power tracsformer.
3. Remove the screws from fuse box and power switch box and remove the GND wire screw.
4. Lift off the AC cord clamp and remove fuse box with power switch box.

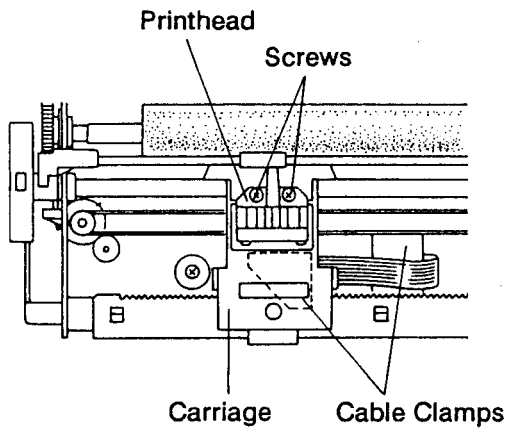


## 4.5 Printhead

1. Remove the 2 screws from the printhead.
2. Carefully raise the printhead and unplug the flat cable.
3. Remove the clamps on the carriage and chassis and unplug the flat cable.

**Note:** When the printhead is installed, ensure that the head gap is correct.

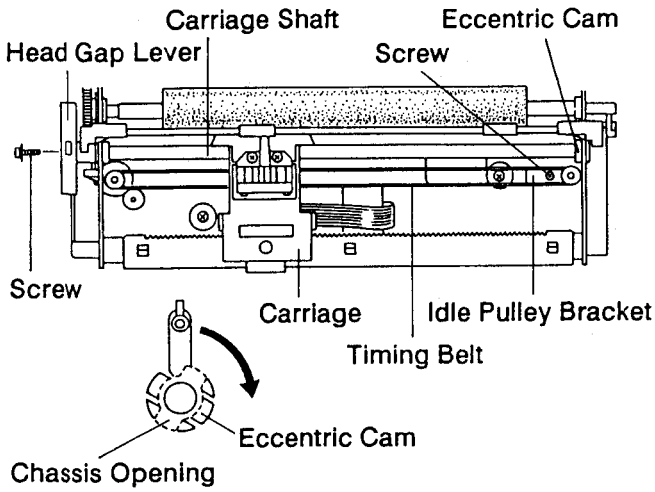


## 4.6 Carriage Assembly

1. Loosen the idle pulley bracket screw and release the timing belt from the pulley.
2. Remove the head gap lever screw, and then remove head gap lever.
3. Remove the eccentric cam placed on the head gap lever side from chassis opening by turnig either clockwise or counter clockwise.
4. Slide out the carriage shaft and remove the carriage assembly.

**Note:** When the carriage shaft is installed, ensure that the head gap is correct.

When installing the carriage shaft, ensure the GND spring contacts under pressure on surface of the carriage shaft.

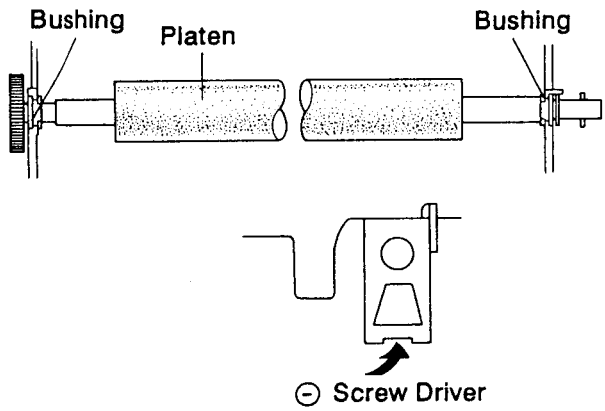


## 4.7 Platen Assembly

1. Unlatch the platen assembly bushing on both sides by prying up with a ⊖ screw driver.
2. Lift off the platen assembly.

**Note:** Keep the platen assembly on a safe place to avoid damage to the rubber.
When installing the platen assembly, ensure that the GND spring contacts the platen shaft with some pressure.

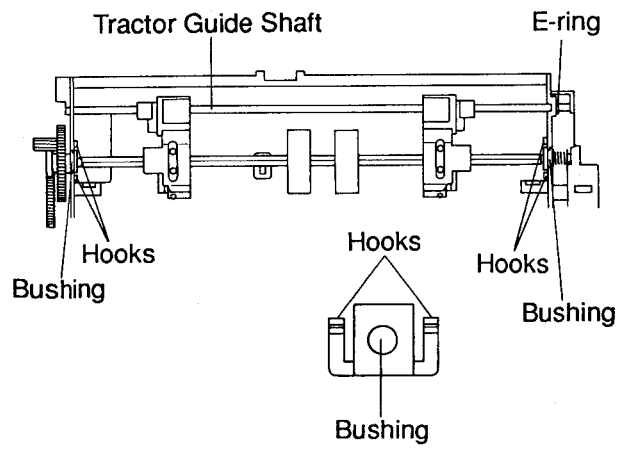


## 4.8 Tractor Assembly

1. Release the tractor guide shaft E-ring and slide out the shaft.
2. Unlatch the hooks and then release the busing on both sides.
3. Lift off the tractor assembly.

# 5. Adjustment

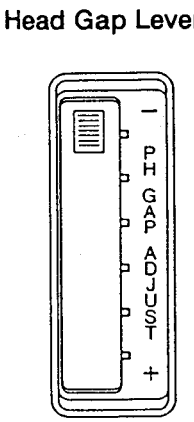


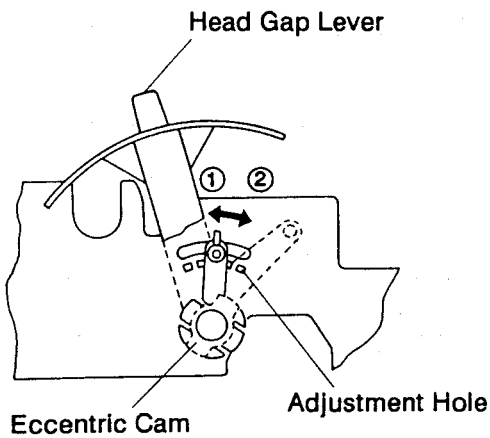


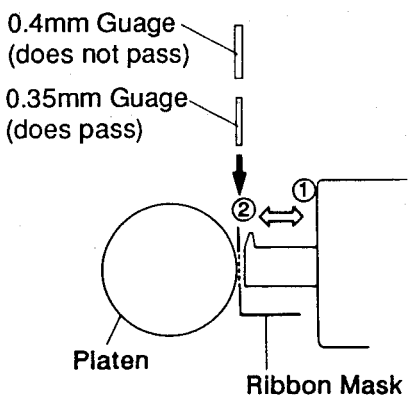


## 5.1 Head Gap

1. Set the head gap lever to the single sheet position.
2. Set the paper feed selector to the "T" position.
3. Ensure the printhead is firmly secured with 2 screws.
4. Move the carriage to the print start position on the platen, and adjust the head gap between the platen and the printhead for a clearance of 0.35mm-0.4mm by turning the left eccentric cam.

   Moving the head gap lever towards the ① position increases the head gap clearance,and moving toward the ② position decreases the clearance.
5. Move the carriage to the print end position on the platen, and adjust the gap as per step 4 above by turning the right eccentric cam.

**Note:** The projection on the eccentric cam is released from the adjustment hole by pulling the knob. Turning the eccentric cam one step causes 0.035mm head movement. The eccentric cam can also be released from the adjustment hole through an opening on the inside of the chassis. Use a pin point object to release the eccentric cam without removing the upper cabinet.

**Note:** Use only a round wire feeler gauge of the specified dimension for this adjustment.

**Note:** The head gap adjustment is required when replacing the head, platen, carriage, carriage shaft and eccentric cams.

## 5.2 Print Timing

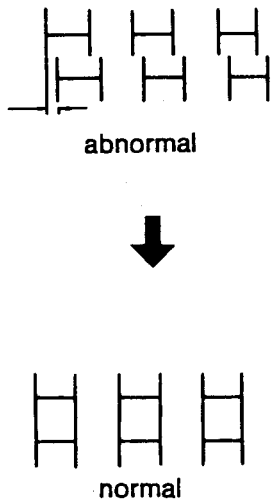


This adjustment is used for 5 different speeds. The print timing is adjusted using the following procedure:

1. Turn on the power while holding down the FF switch.
2. Select the print speed by pressing the COLUMN switch, and print the "H" pattern by pressing the SET switch.

**Note:** The "H" pattern is printed for 4 full lines for each speed.

3. Check the print timings comparing the "H" pattern from line to line.
4. If the print timing is misaligned, adjust it by using the LF (Move to right) and FF (Move to left) switches and retry the printing for a final check.

**Note:** Pressing switch moves the line to move in 1/2160 inch increments.

5. Press the FUNCTION key to save the print timing into memory. The printer shifts to the normal print mode.

**Note:** If the second line of the "H" pattern is shifted by more than half of an "H" character, check that the printing mechanism is normal before starting adjustment.

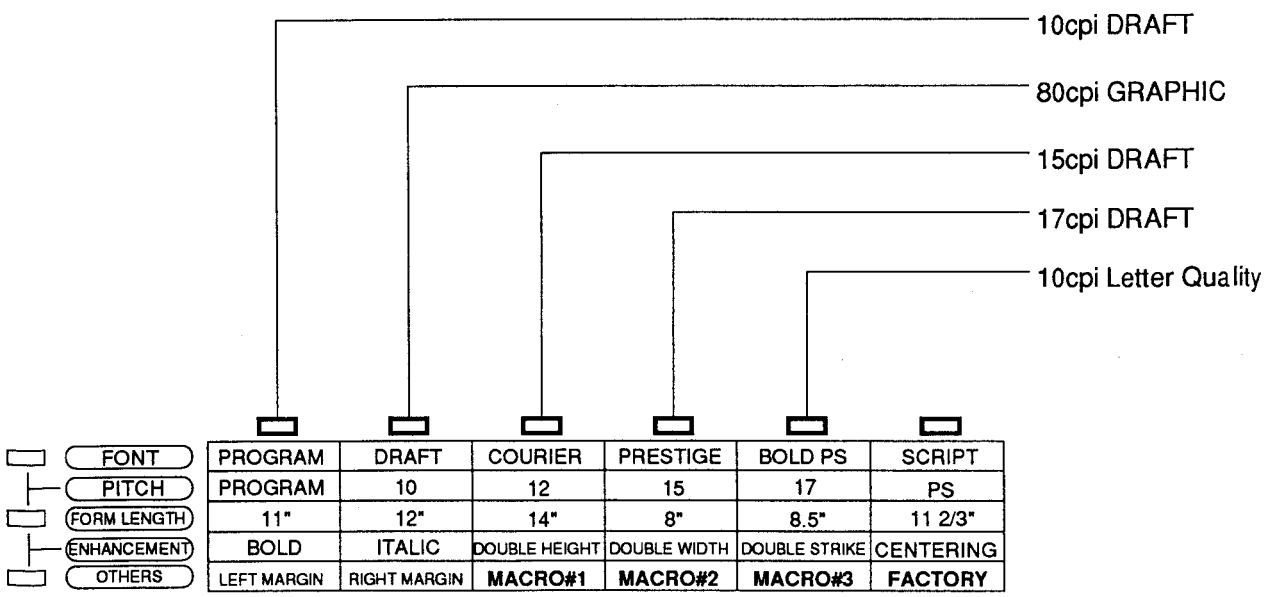


| | | | | | | |
|---|---|---|---|---|---|---|
| FONT | PROGRAM | DRAFT | COURIER | PRESTIGE | BOLD PS | SCRIPT |
| PITCH | PROGRAM | 10 | 12 | 15 | 17 | PS |
| FORM LENGTH | 11" | 12" | 14" | 8" | 8.5" | 11 2/3" |
| ENHANCEMENT | BOLD | ITALIC | DOUBLE HEIGHT | DOUBLE WIDTH | DOUBLE STRIKE | CENTERING |
| OTHERS | LEFT MARGIN | RIGHT MARGIN | **MACRO#1** | **MACRO#2** | **MACRO#3** | **FACTORY** |

# 6. Mechanical Function

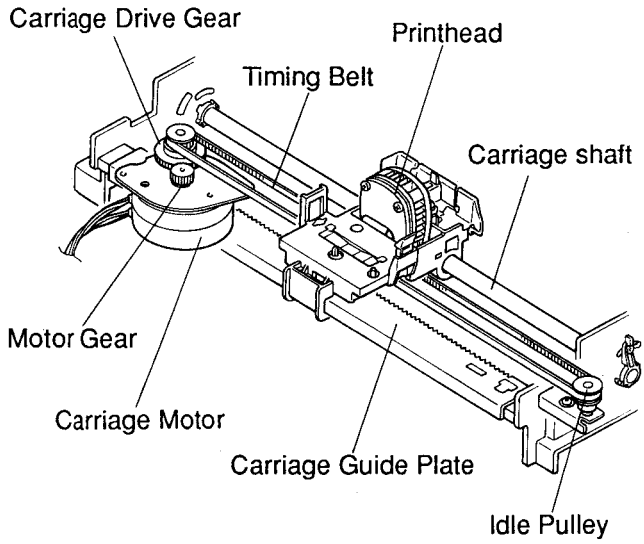


## 6.1 Carriage Drive System

This operation uses a pulse motor to move the carriage 1/60 inch per single drive pulse. The carriage slides on the carriage guide plate and carriage shaft when spacing to the right and left. The printhead is fixed on the carriage by 2 screws.

### 6.1.1 Power Transmission Mechanism

The rotation of the carriage motor is transmitted to the carriage through the carriage drive gear via the motor gear which is attached to the carriage motor. The timing belt fixed under the carriage is looped around the idle pulley and carriage drive gear. This causes the carriage to move left and right along the carriage shaft. Also, the timing belt is given proper tension by the idle pulley tension spring hooked between pulley bracket and chassis.

### 6.1.2 Print Timing

Print timing for pica (1/60 inch) and elite (1/60 inch) is generated by a software operated timer. Refer to "Carriage Motor Drive Block" page 8-10.

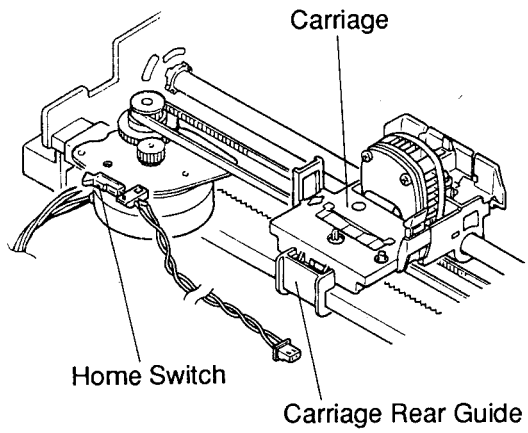


### 6.1.3 Home Position Detector Mechanism

The home switch is a leaf switch located at the far left of the printer. Its function is to notify the CPU of the reference position of the carriage. During spacing operation, when the carriage approaches the left margin,the carriage rear guide,mounted on rear of the carriage,actuates the home switch,generating the signal and indicating carriage position the CPU.

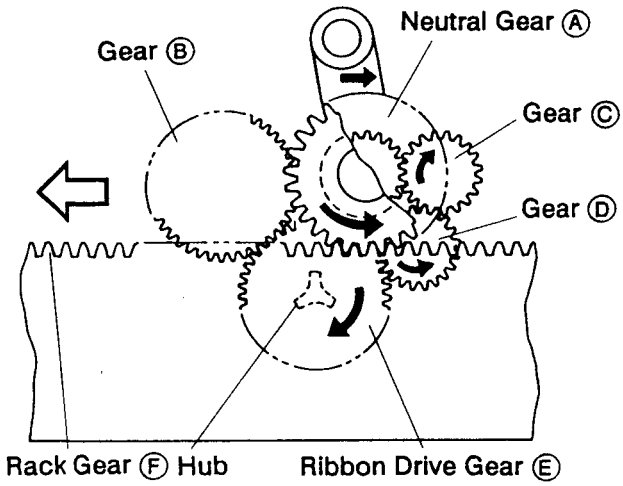


Fig.1 (Bottom View)

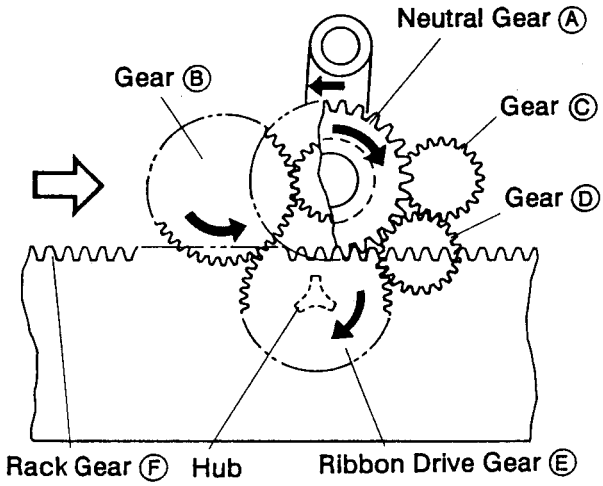


Fig.2 (Bottom View)

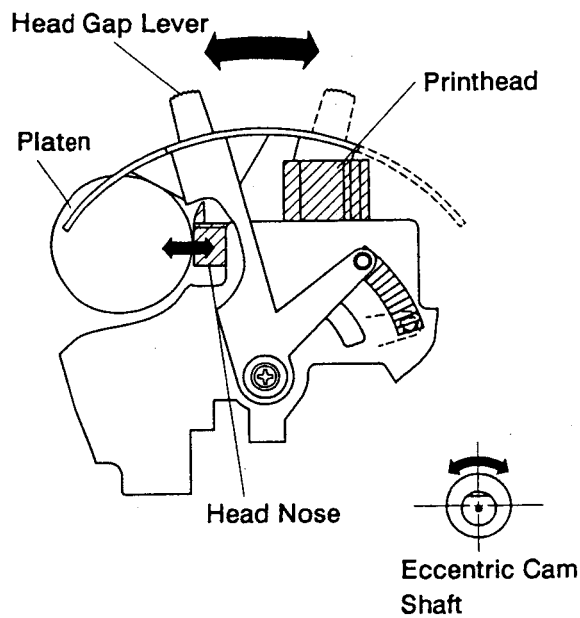


### 6.1.4 Ink Ribbon Cassette Drive Mechanism

This function performs the ribbon feed operation in accordance with the movement of the carriage. The ink ribbon cassette drive mechanism is shown in Figures 1 and 2.
This mechanism gives uniform ribbon feed regardless of the direction of the carriage movement. It consists of the rack gear Ⓕ , ribbon drive gear Ⓔ with the ribbon feed hub and 3 gears.

When the carriage moves to the right (Fig.1), rack gear Ⓕ turns the neutral gear Ⓐ counter-clockwise, and then neutral gear Ⓐ engages with gear Ⓓ via the gear Ⓒ which turns the ribbon drive gear Ⓔ clockwise with the hub.

When the carriage moves to the left (Fig.2), rack gear Ⓕ turns neutral gear Ⓐ clockwise, and then neutral gear Ⓐ engages with gear Ⓑ which turns ribbon drive gear Ⓔ clockwise with the hub.

### 6.2 Paper Thickness Selection

Selection for the number of copies is made by changing the distance between the platen and the printhead nose tip. When the head gap lever is operated, the eccentric cam shaft revolves,moving the carriage forward or backward.

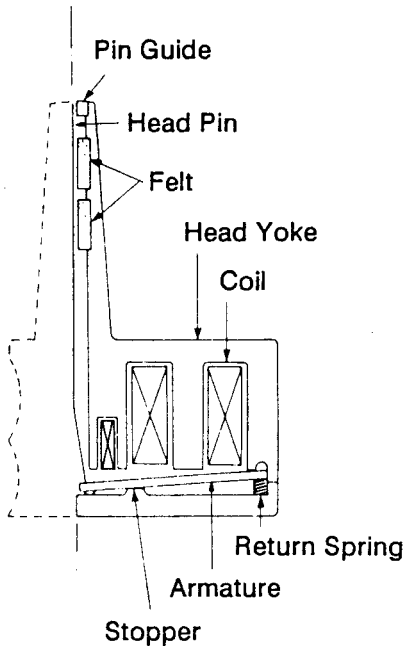


## 6.3 Printhead

The printhead utilizes 24 electromagnets as a driving source, which causes the pins to strike through the ink ribbon against the platen onto the typing paper for matrix printing. The construction of the printhead is shown at left.

### 6.3.1 Power Transmission Mechanism

The set of 24 electromagnets consists of a one piece yoke and 24 coils. The armature which secures the pins is supported by this yoke.

### 6.3.2 Printhead Pin Operation

When a coil assembly is excited by a print signal, the armature is drawn in, and the pin secured by the armature is guided by the various guides to move in the direction of the platen. The pin strikes through the ribbon to the paper. Next, the return spring moves the armature and pin from the platen back to the rest position.

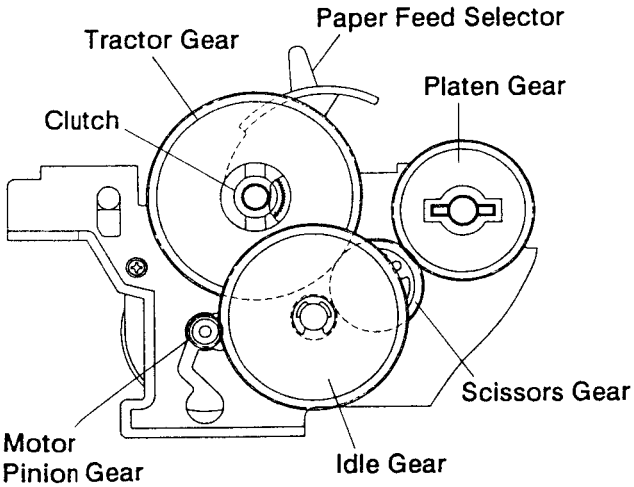


## 6.4 Paper Feed Mechanism

A DC pulse motor is used for paper feed. Both continuous paper and single sheet can be fed by operating the paper feed selector. Continuous paper is loaded on both the left and right sides of the pin drum of the tractor drive device. Continuous paper is fed from the bottom or rear of the printer. Signal sheet paper is fed from upper slot on top of the printer. The paper feed mechanism is shown below.

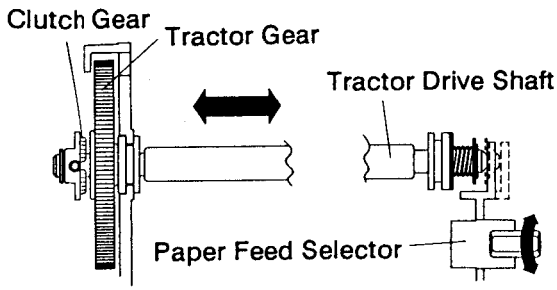


### 6.4.1 Power Transmission Mechanism

Rotation is transmitted from the pulse motor to the platen gear and tractor gear via the idle and scissors gears. The tractor gear consists of a drive gear and clutch mechanism which functions when operating the paper feed selector. The selector lever pushes end of the tractor shaft to disengage the tractor drive device from the tractor gear, and then releases the spring loaded friction rollers by rotating the cam shaft to apply the gripping force for single paper feed.
The tractor drive mechanism consists of a pin wheel with a spring loaded a tractor cover and a drive shaft to feed continuous paper.

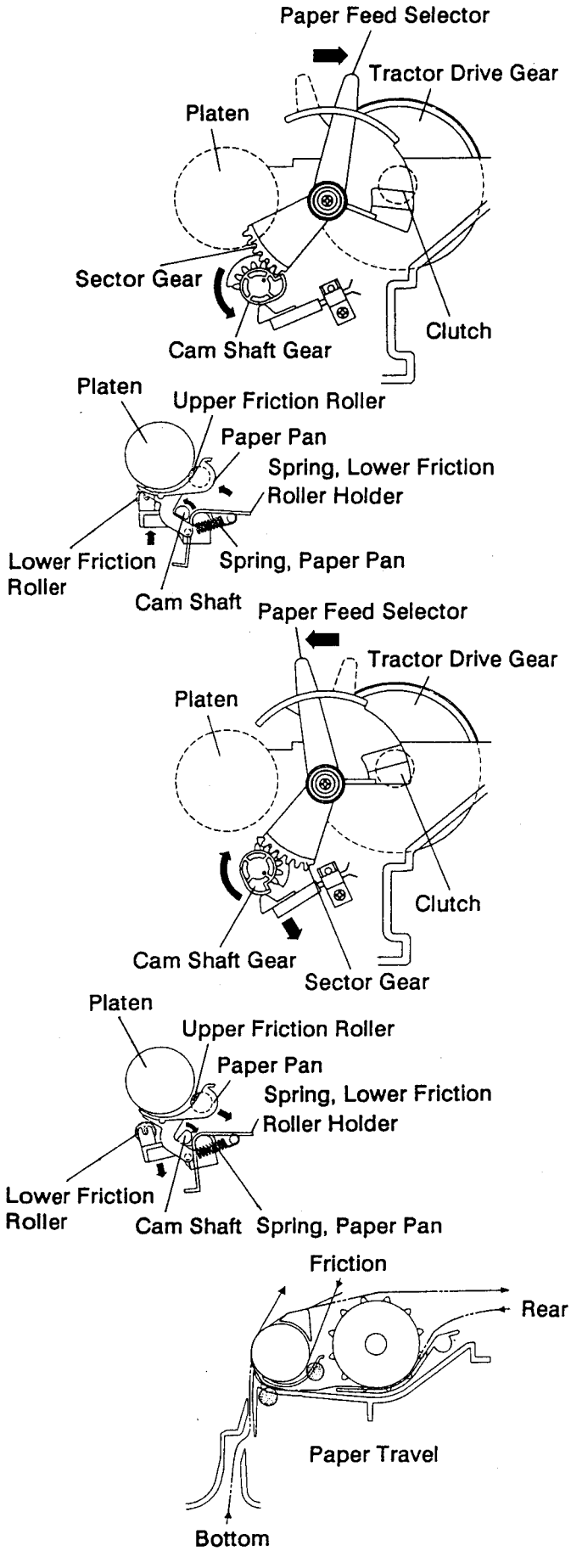


### 6.4.2 Paper Feed Mode

#### (1) Friction Paper Feed Mode

This mode is for feeding single-sheet paper from the slot on top of the printer in the friction paper feed position. By operating the paper feed selector, the tractor drive gear is disengaged from the tractor drive device, and the paper feed selector lever releases the spring loaded upper and lower friction rollers by rotating the cam shaft to apply gripping force to the platen. This enables paper feeding with platen rotation.

#### (2) Tractor Paper Feed Mode

This mode is for feeding continuous paper from either the bottom or rear of the printer. By moving the paper feed selector to the "T" position, the tractor drive gear is engaged with tractor drive shaft by cam function, which enables turning the tractor drive mechanism. Then the sector gear molded on the paper feed selector turns the cam shaft, which moves the upper and lower friction rollers away from the platen to enable free paper passing from the rear feed. The paper feed selector also pushes the leaf switch to notify the CPU that the selector is in the "T" position when turning the lever.
Continuous paper can be fed with either pull or push feed. Feed from the tractor upper side enables pull feed,and feed from the tractor lower side enables push feed.

## 6.5 End of Paper Detectors

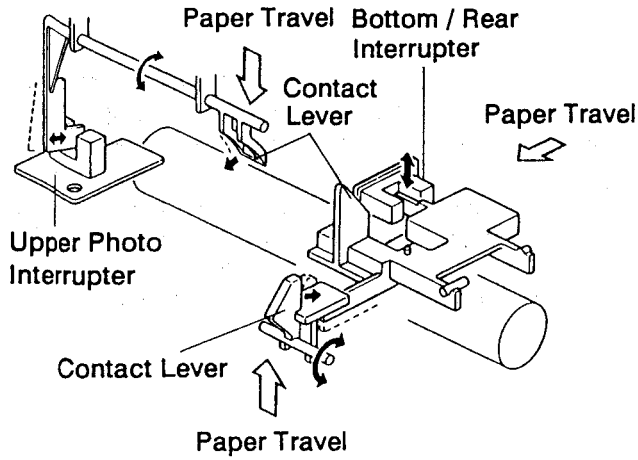


The printer has two photo interrupters used for detecting paper out in continuous or a single paper feed. The upper photo interrupter is mounted under the upper slot. The bottom and rear photo interrupters are mounted under the tractor drive mechanism, and those contact levers are respectively placed in the upper slot, in the bottom slot and under the tractor pin wheel. When paper is out, the contact lever shuts off the photo switch by breaking the light beam, and a signal is sent to the CPU.

## 6.6 Paper Load

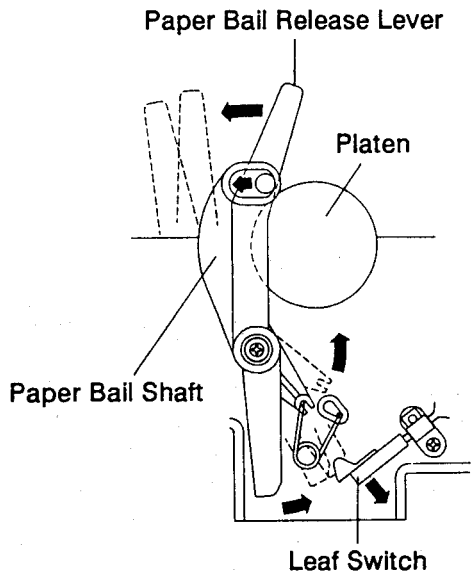


Pulling the paper bail release lever forward moves the paper bail away from the platen. Continued forward movement of its lever causes the leaf switch to be actuated for paper auto loading and memo loading.

# 7. Electronic Circuit Block Diagram

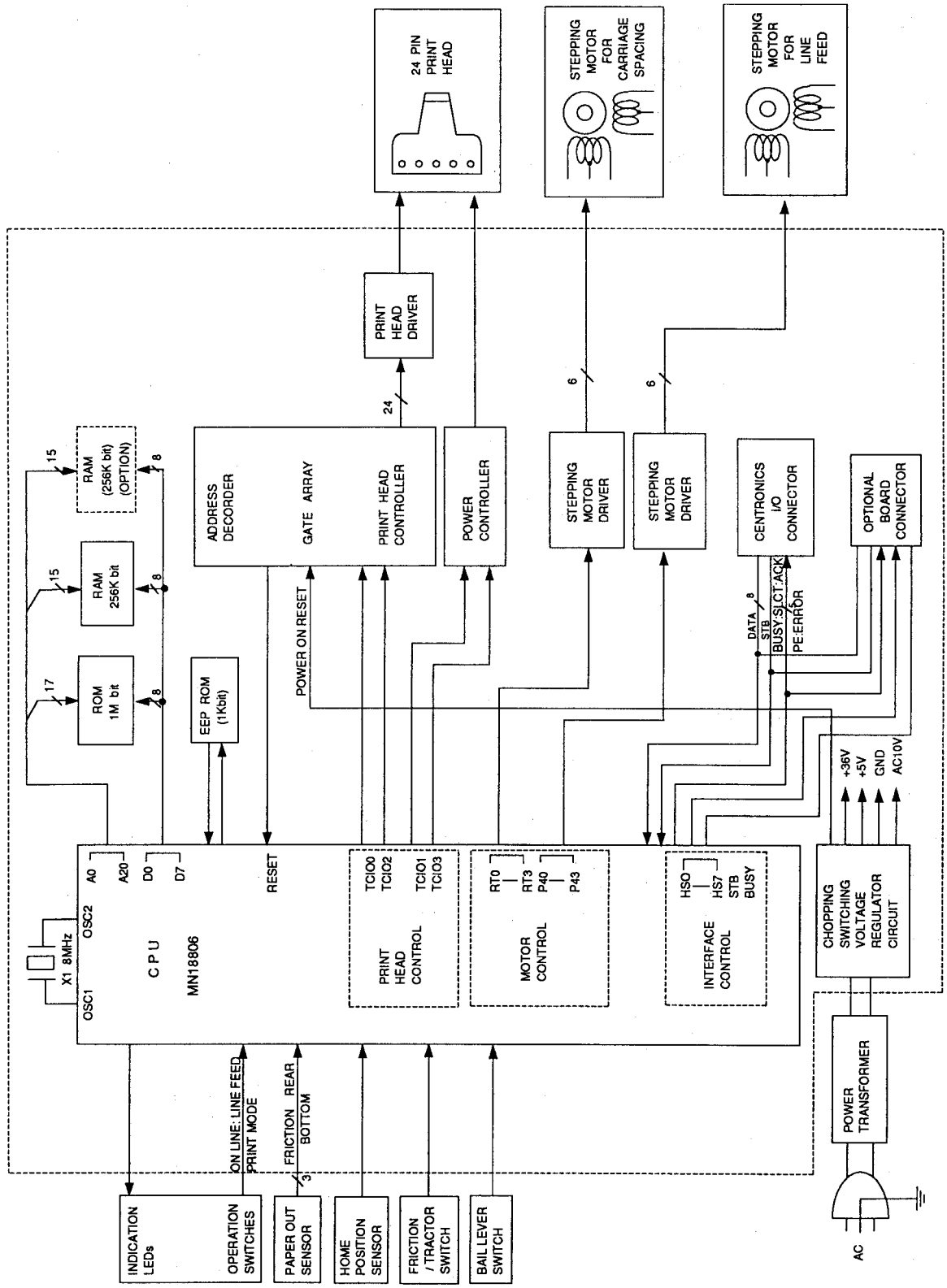

# 8. Electronic Circuit Descriptions

## 8.1 Principle of Operation

The KX-P1123 has three switches and two sensors. The home position switch sets a reference for the carriage and is necessary for aligning the first position. The Friction/Tractor switch detects the way of paper-feed by Friction or Tractor. The Bail Lever Switch is actuated for paper auto loading and memoload.
The paper out sensors detect paper end, and prevent printing operation when the printer is out of paper.
The printer has three drive circuits; carriage spacing motor, paper feed motor and printhead.
The control panel is composed of switches and LEDs which indicate the various states of the printer.

Logic Diagram

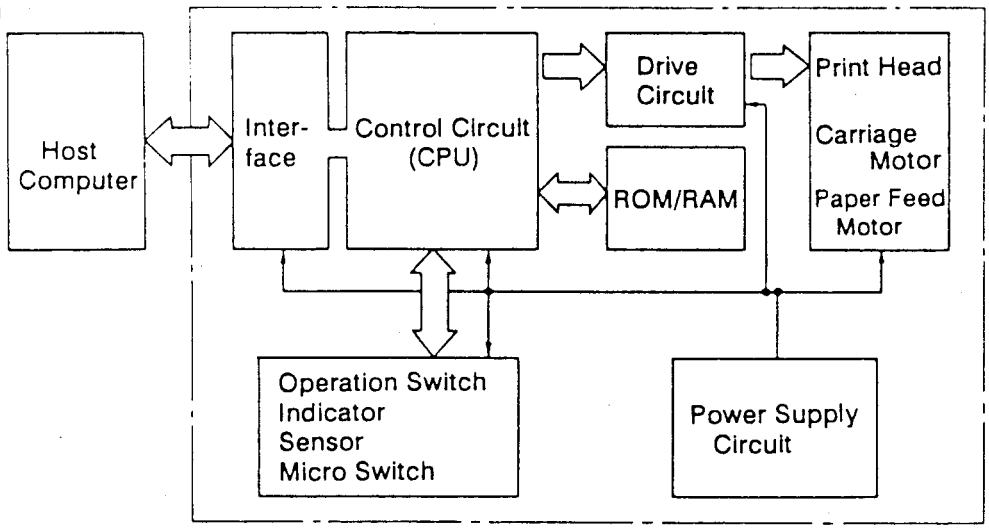


## 8.2 Circuitry

### 8.2.1 Power Supply Block

(1) Power and Filter Block

The fuse and filters are attached to a single printed circuit board. Primary power enters the power switch and passes through fuse F501 (1.6A). Absorption capacitors (C501,C502 and C503) together with choke (L501), located near the primary transformer, prevent noise from entering the circuit from the power source, and prevent noise from leaving the printer to the power source. As a result, the printer's digital circuitry operates very stably, unaffected by line noise, and prevents printer noise from affecting the outside power source.

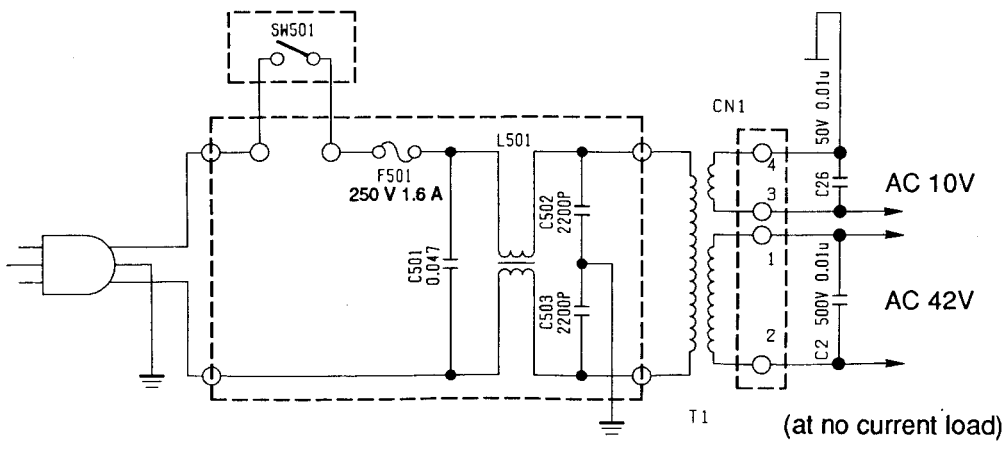

(2)Power Circuitry

Three kind of voltage are needed on this board. DC+36V is used for motor and print head drivers, DC+5V is for logic circuit, and AC 12V is for Serial Interface optional boad. The AC 42V, provided from secondary side of transformer, is rectified by the diode bridge circuit. DC+36V is provided from rectified voltage by switching Q1. DC+5V is provided from DC+36V by switching Q4. IC3 (AN8081K) is pulse width modulation control IC (step-down type).

(a) DC + 36V Switching Regulator Circuit

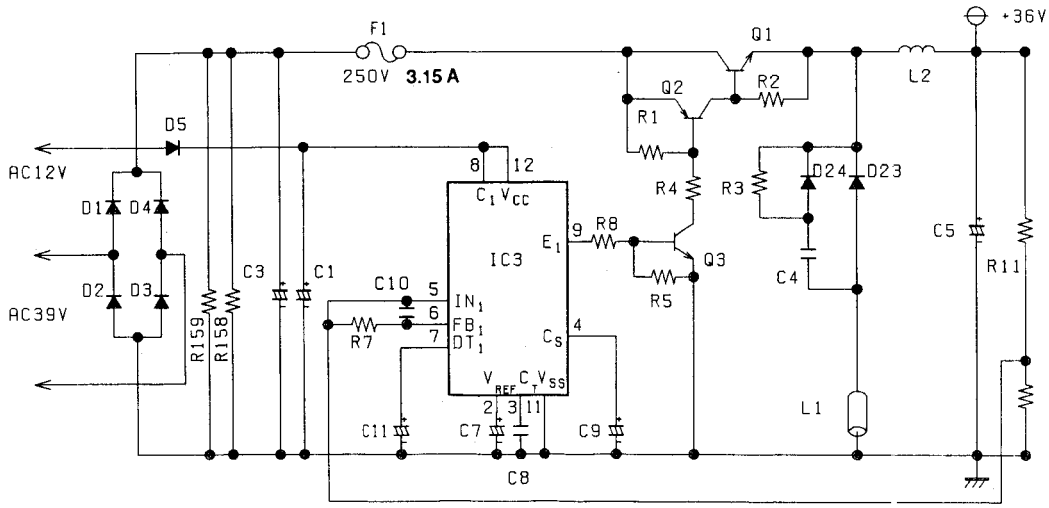


(b) DC + 5V

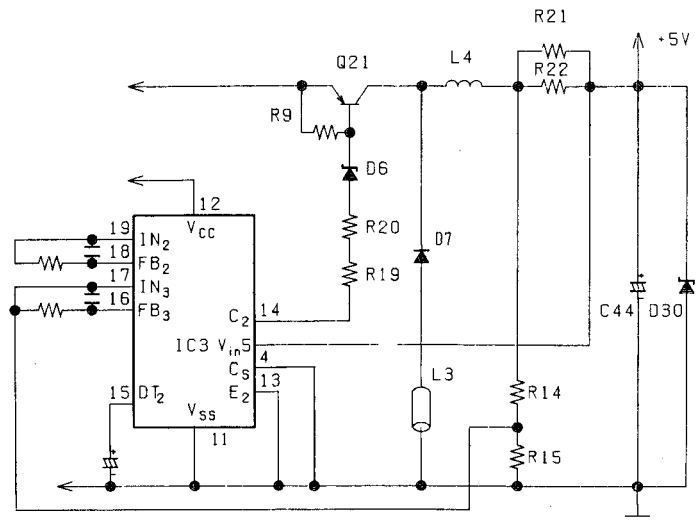

(c) IC3 (AN8081K)

This regulator IC is consisted of two PWN voltage control circuits and reset circuit. One PWM voltage control circuit is for only DC + 5V output and the other is for variable voltage output. Over vurrent protection is prepared for DC + 5V-GND short. DT1 and DT2 are used for "Soft Start" when power is turned on. Switching frequency (fs) is determined by CT capacitor.

$fs \approx 5 \times 10^{-5} \times \frac{1}{C}$ (Hz)

AN8081K Block Diaglam

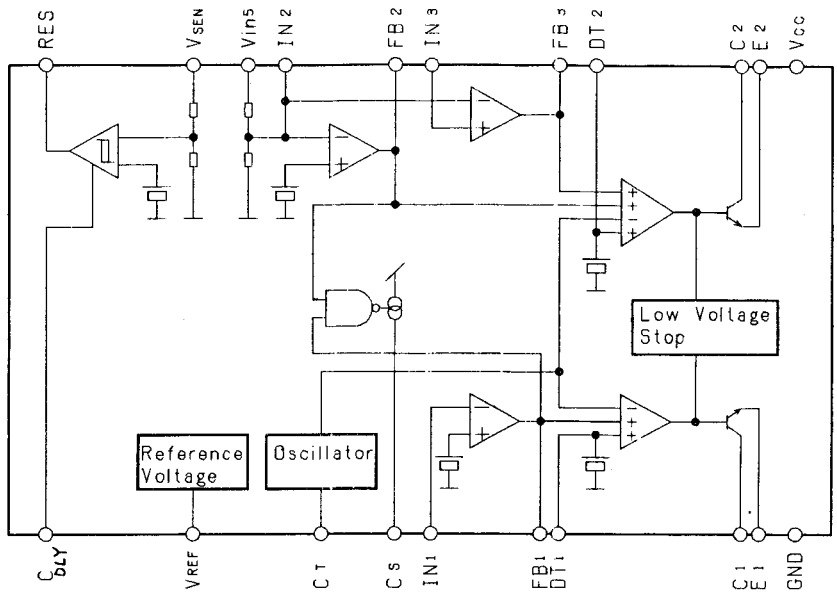


(d) Reset Circuit

The reset circuit is provided to initialize the gate array (IC2) and the MPU(IC1). About 8msec after the voltage at IC3 pin 21 reached at approximately 4.3V, the reset terminal RES changes from L to H.

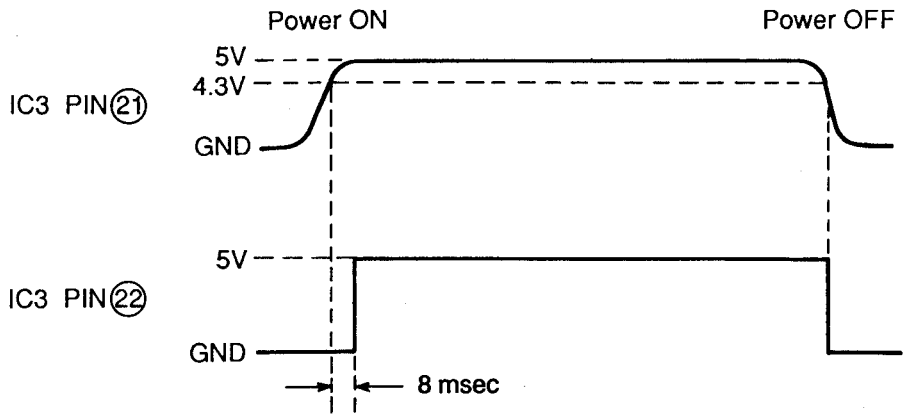

### 8.2.2 CPU, Gate Array and Peripheral Circuit Block

(1) This block diagram consists of the CPU(IC1), Gate Array(IC2), ROM(IC7), RAM(IC5) and optional RAM(IC6). CPU receives the data from the host computer, processes the input from the printhead over-heat sensor and operation switch. It also controls the carriage, paper feed motors and the printhead.

ROM contains the operation program, which controls data processing and mechanical functions. Also it contains the character generator, which determines the apperance of the characters.

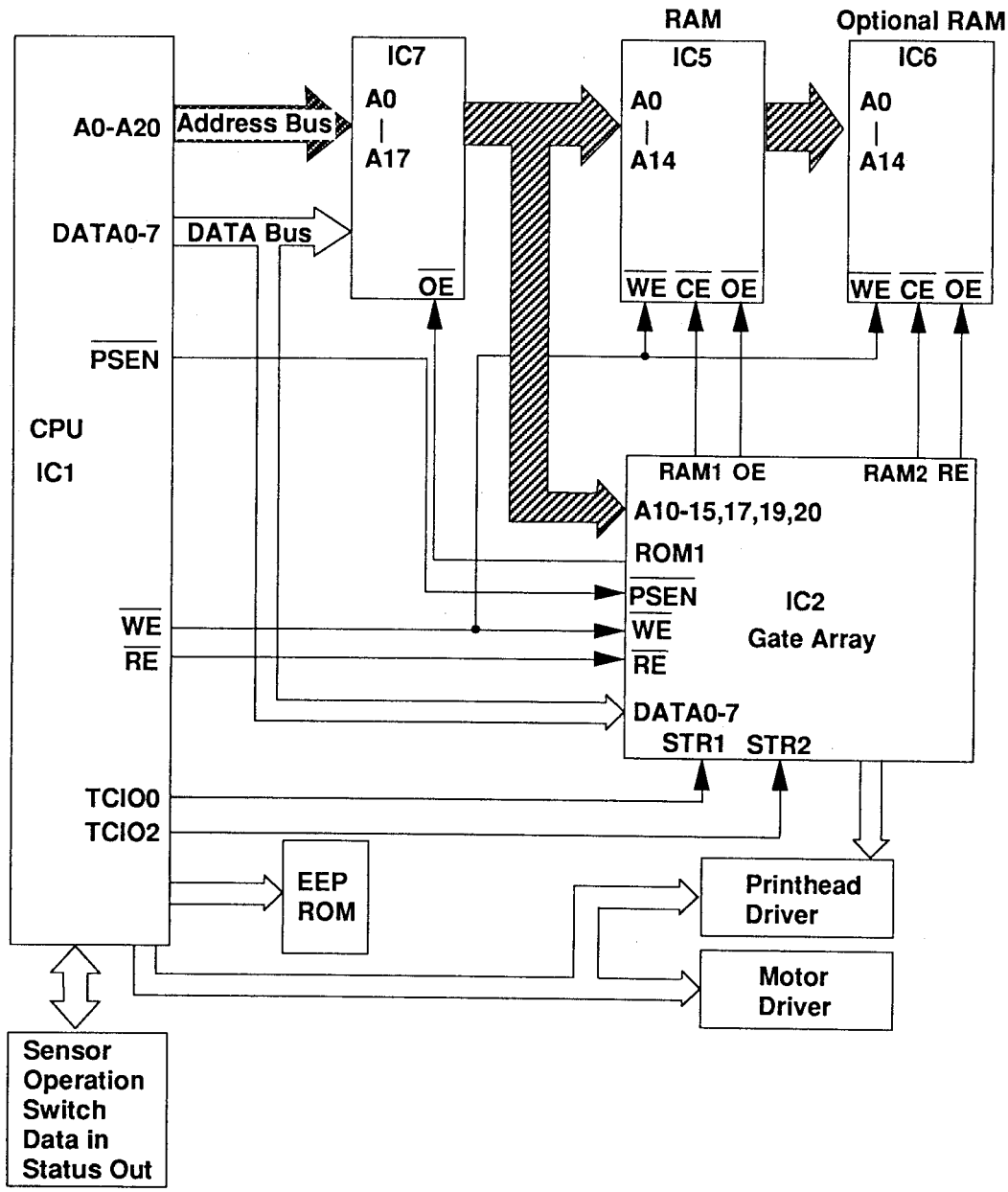

(2) CPU Functions

MN18806 Block Diagram

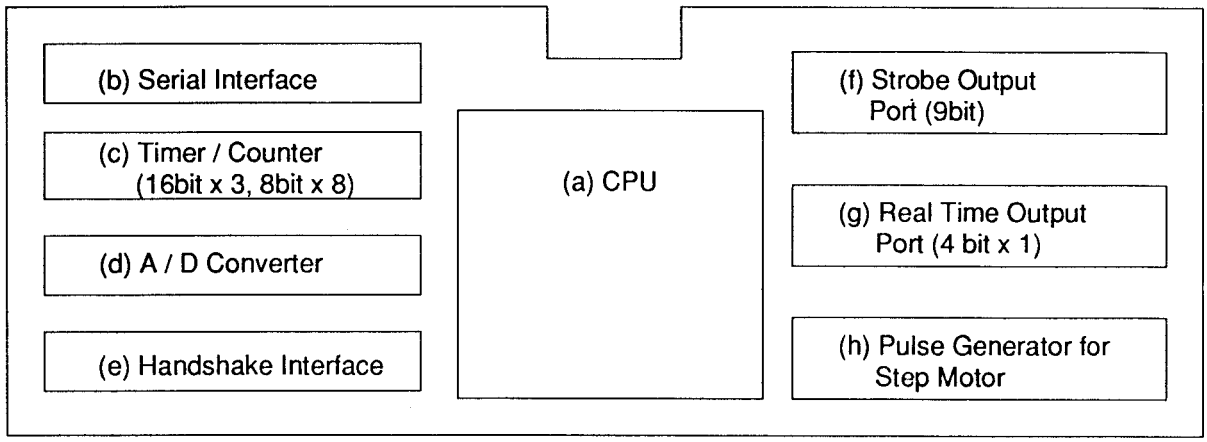


(a) CPU
This block mainly consists of the Program Counter, Arithmetic Logical Unit, and Instruction Decoder. This block fetches the program from the ROM, decodes the instructions, and processes it accordingly.

(b) Serial Interface
This block supports a serial communication interface (synchronous and asynchronous). This block also has a baud rate generator of up to 9600 baud.

(c) Timer/Counter
This block consists of three 16-bit timers and eight 8-bit timers. They are used for generating the timing for the printhead and carriage motor.

(d) A/D Converter
In this CPU, 8 bits/4 channel A/D Converters are prepared. In this model, one channel is used for sensing the overheat of the printhead and other channels are used for input of switches.

(e) Handshake Interface
In this CPU, the Centronics Parallel interface (usually called Handshake Interface) is prepared. The busy signal to the host computer is generated automatically when receiving the DSTB(data strobe) signal. And the acknowledge signal is also generated automatically when the busy signal turns to L level(Ready state).

(f) Strobe Output Port
This port is used for driving 9 LEDs on the Control Panel. The other 3 LEDs are driven by the I/O ports.

(g) Real Time Output Port
In this block, 4channel real time ports are included. All of these are used as a real time output port for power and timing control of printhead.

(h) Pulse Generator for Step Motor
In this CPU, pulse generator for step motor is prepared. This function is used for carriage spacing motor. Motor driving pattern is generated automatically when the generator receives the starting signal. And the pattern is synchronized with the output of the timer which determines motor pulse rate.

(3) CPU Pin Functions

The CPU has total of 100 pins and an 8MHz input clock. It controls a 128KB ROM,32KB RAM, 32KB optional RAM, and an optional interface board. These RAMs are used as an input buffer, line buffer, bit image buffer, and download area. The CPU pin functions are as follows.

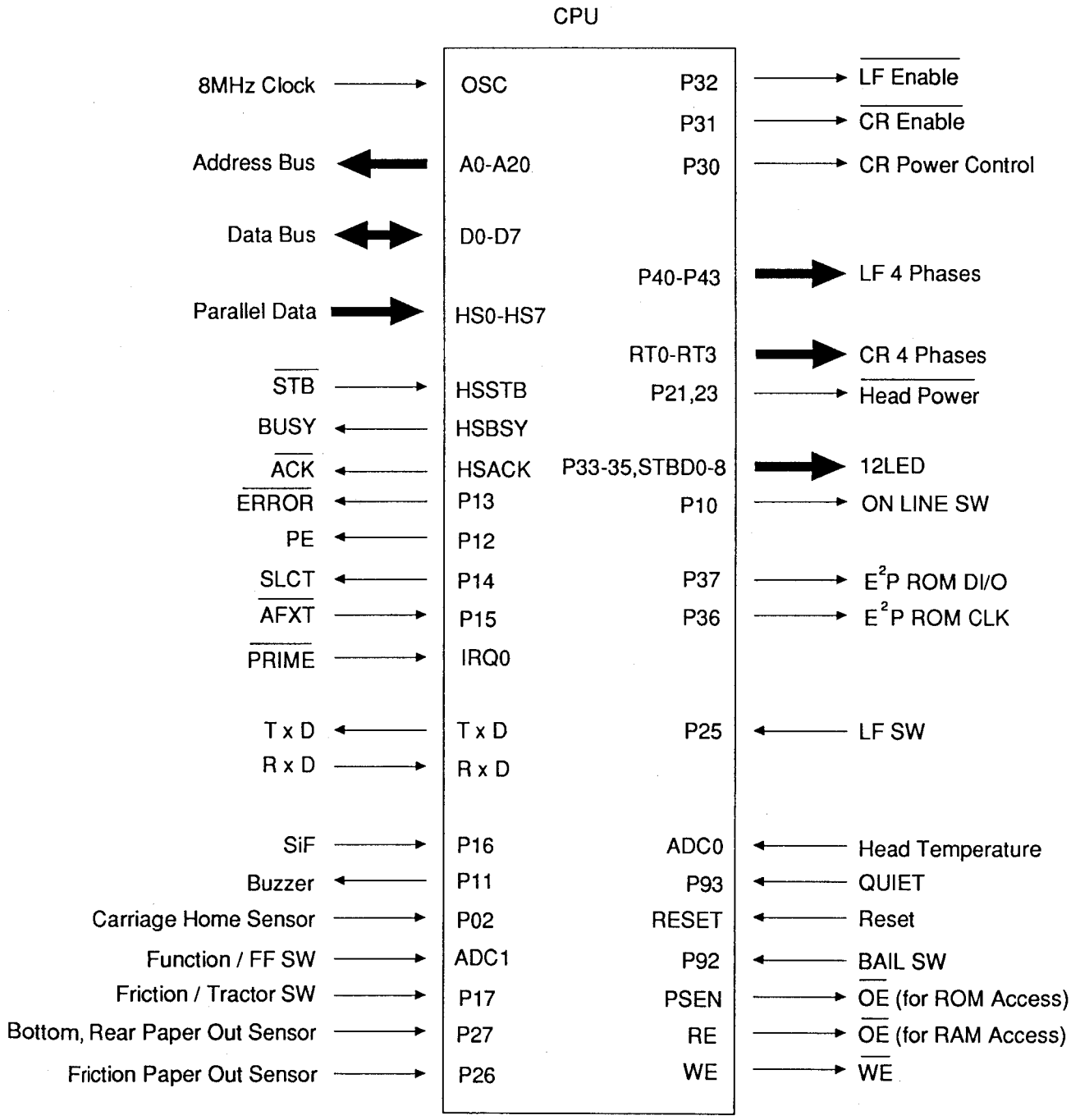

(4) Gate Array
The gate array(IC2) is a 64 Pin Flat Package and it consists of 3 blocks:

(a) Decoder
It is used for access and refresh for RAMs.

(b) Head Drive Controller
Head data are output.

(c) Reset Control (Watch Dog Timer)
When power is on or when program does not run properly, reset pulse is generated.

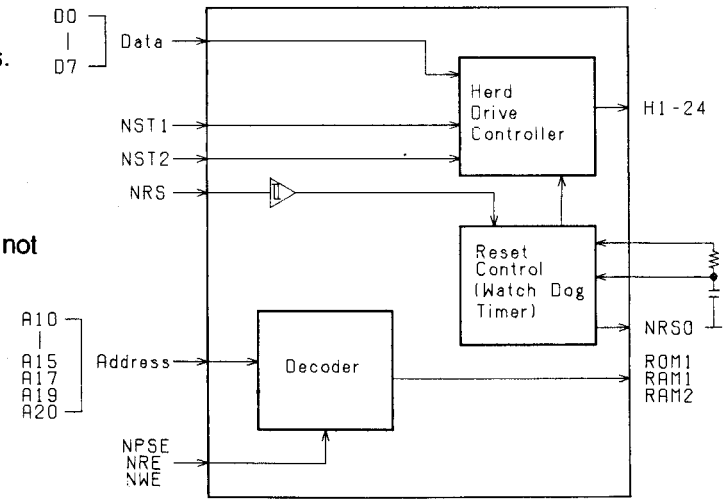


(5) Gate Array Pin Function
The pin functions are as follows.

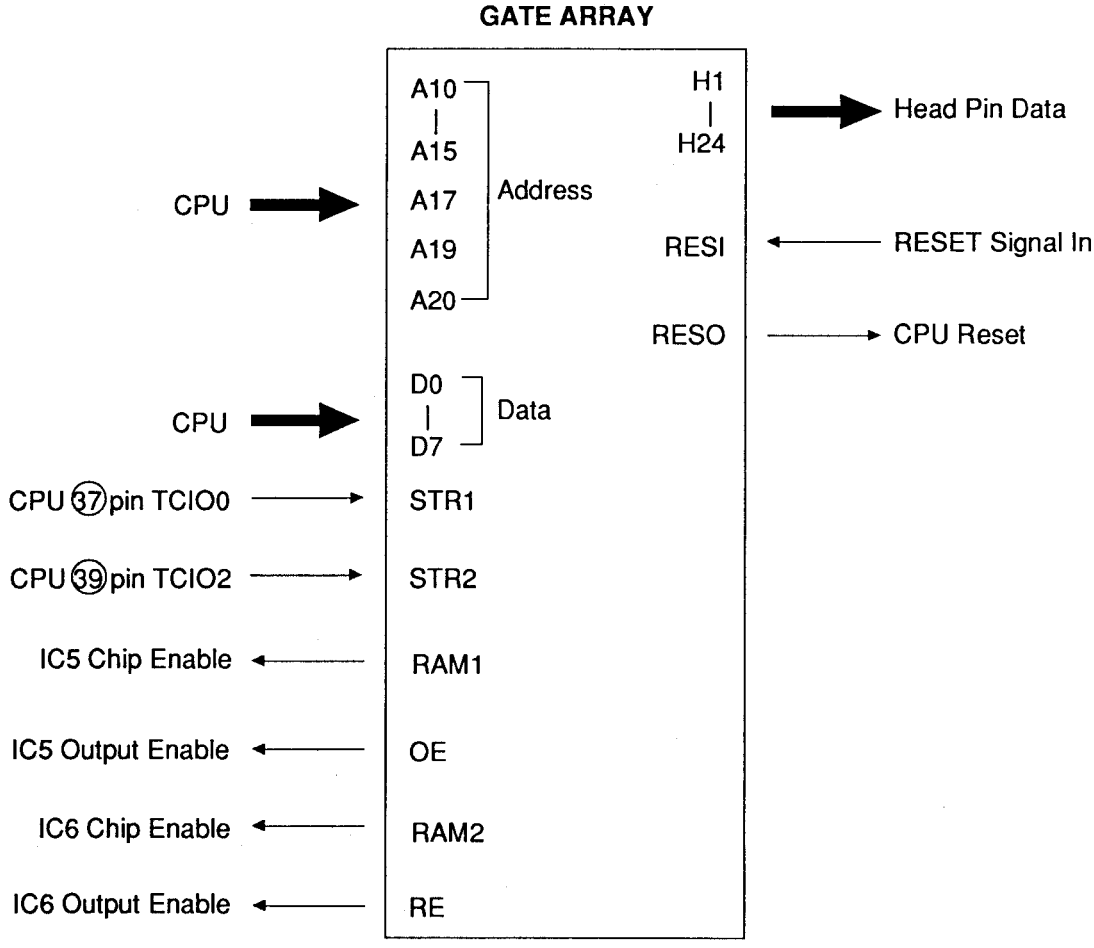

(6) Chip Select Block
The CPU can access to 128K Byte ROM area and 64K Byte RAM area.

ROM Memory Map

| Address (DECIMAL) | Address (Hex) | PSEN | Chip | Description |
|---|---|---|---|---|
| 0-131071 | 00000H<br>1FFFFH | L | ROM(IC7) | 128K Byte |

RAM Memory Map

| Address (DECIMAL | Address (Hex) | A20 | A19 | A17 | A15 | A14 | A13 | A12 | A11 | A10 | A9 \| A0 | Chip |
|---|---|---|---|---|---|---|---|---|---|---|---|---|
| 0 | 0000H | 0 | 0 | 0 | 0 | 0 | 0 | 0 | 0 | 0 | 0 | Not Used |
| 1024 | 0400H | 0 | 0 | 0 | 0 | 0 | 0 | 0 | 0 | 1 | 0 | H1,3,5,7 |
| 2048 | 0800H | 0 | 0 | 0 | 0 | 0 | 0 | 0 | 1 | 0 | 0 | H9,11,13,15 |
| 3072 | 0C00H | 0 | 0 | 0 | 0 | 0 | 0 | 0 | 1 | 1 | 0 | H17,19,21,23 |
| 4096 | 1000H | 0 | 0 | 0 | 0 | 0 | 0 | 1 | 0 | 0 | 0 | H2,4,6,8 |
| 5120 | 1400H | 0 | 0 | 0 | 0 | 0 | 0 | 1 | 0 | 1 | 0 | H10,12,14,16 |
| 6144 | 1800H | 0 | 0 | 0 | 0 | 0 | 0 | 1 | 1 | 0 | 0 | H18,20,22,24 |
| 7168 | 1C00H | 0 | 0 | 0 | 0 | 0 | 0 | 1 | 1 | 1 | 0 | RAM5 Refresh Information |
| 8192 \| 32767 | 2000H \| 7FFFH | 0 | 0 | 0 | 0 | 0 | 1 | 0 | 0 | 0 | 0 | RAM(IC5) |
| | | 0 | 0 | 0 | 0 | 1 | 1 | 1 | 1 | 1 | 1 | |
| 32768 \| 65535 | 8000H \| FFFFH | 0 | 0 | 0 | 1 | 0 | 0 | 0 | 0 | 0 | 0 | RAM(IC6) |
| | | 0 | 0 | 0 | 1 | 1 | 1 | 1 | 1 | 1 | 1 | |

Gate Array (IC2)

### 8.2.3 Parallel Interface Circuit

The Interface Block receives data from the host computer and generates the appropriate status signals.The handshake method is described in the following steps.

Process

(1) A $\overline{\text{STROBE}}$ signal is sent from the host computer and is used to set the internal latch of the CPU. At the same time CPU pin (92) sends a BUSY signal to the host computer through IC8 pin(6).
(2) The CPU checks the internal latch periodically and checks whether a $\overline{\text{STROBE}}$ is sent or not.
(3) If a $\overline{\text{STROBE}}$ signal has been sent, the CPU reads the data from HS ports(HS0-HS7). Then the internal latch is cleared automatically.
(4) When the BUSY signal disappears, an ACK (Acknowledge) signal is sent to the host computer automatically during the time determined by software.
(5) The CPU then judges the received data as to whether it is a character code,control code or bit image data and processes the data accordingly.
(6) The CPU processes another command (for instance; operation switch state check, motor drive during print).

Thus the data received by handshake is accomplished.

Timing Chart

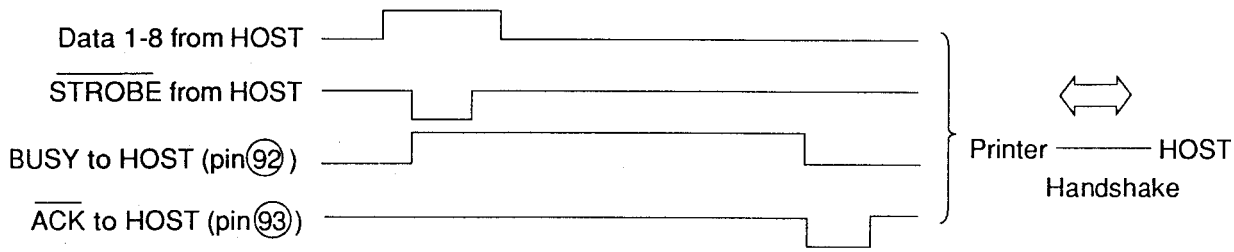


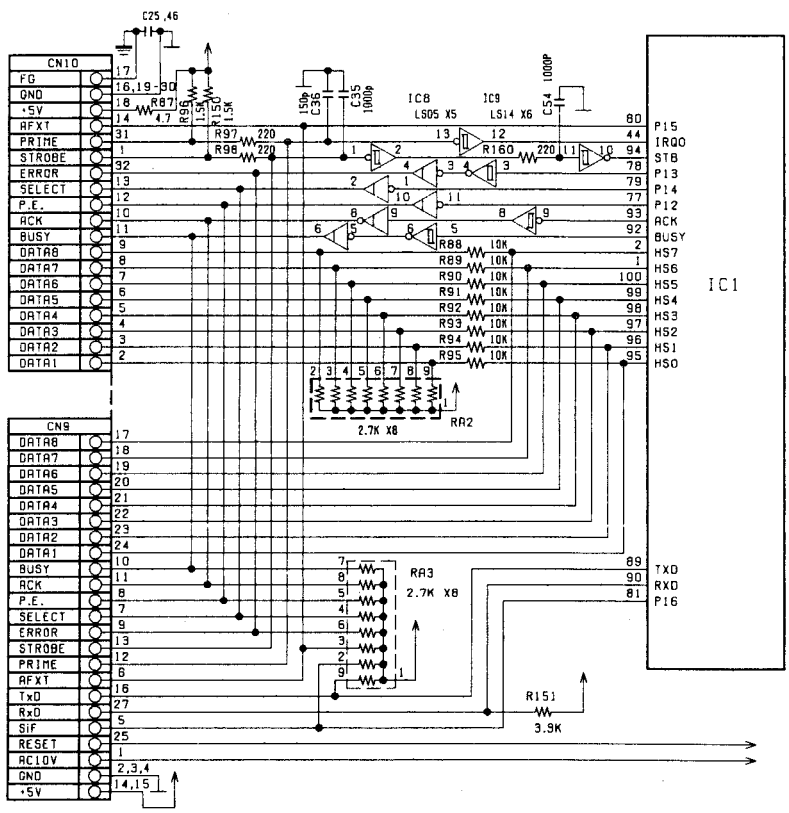

### 8.2.4 Carriage Motor Drive Block

The Carriage motor is driven by the four signals from RT0,RT1,RT2 and RT3, and is driven by 1-2 phase driving system.

The time interval is determined by the CPU's interval counter clock as generated from the CPU's clock.

This circuit is a chopper drive circuit for fixing the amount of the current through the motor during stepping and has two threshold voltages (VSH,VSL). IC12 compares the voltage drop across R138(R137) which is in proportion to the current through the motor. For example, when the voltage drop across R138(R137) is larger than VSH, IC12 is turned off and Q17(Q18) is turned off, then Q20(or Q19) is turned off. At the same time, the current through the motor decreases, because the voltage drop across R138(R137) decreases. When this voltage drop is smaller than VSL, IC12 is turned on, and the current through the motor increases.

The amount of current through the motor is fixed during stepping by repeating this process.

These threshold voltage (VSH,VSL) are able to be changed by P30 H or L signal according to the print mode.

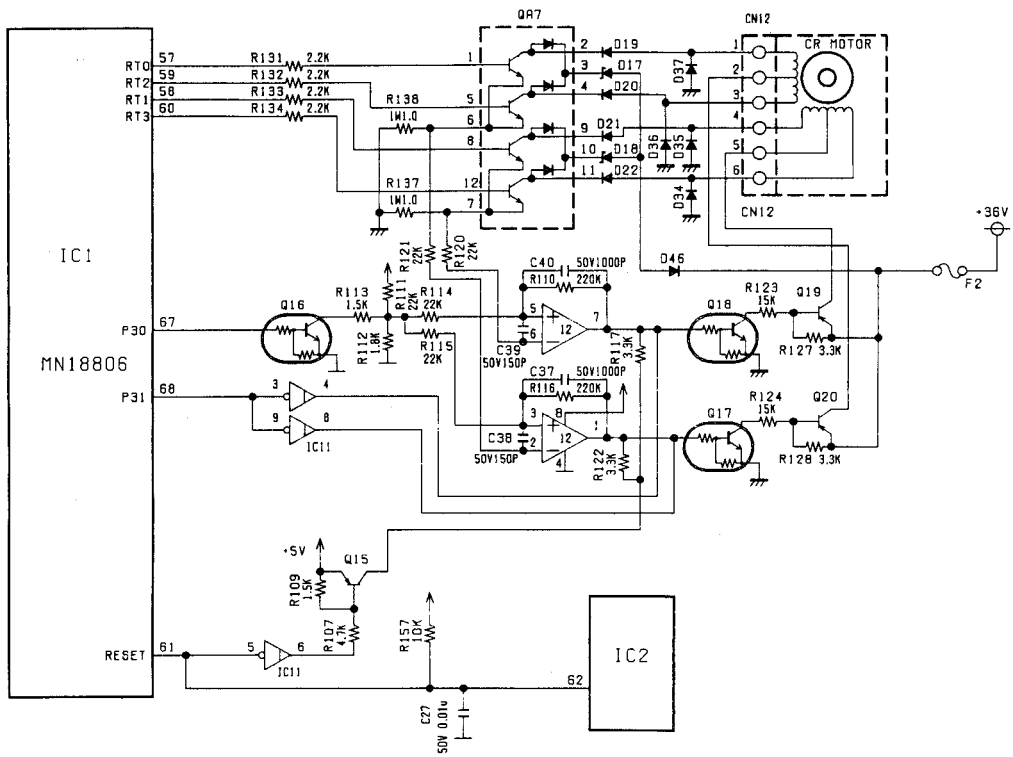


Timing Chart

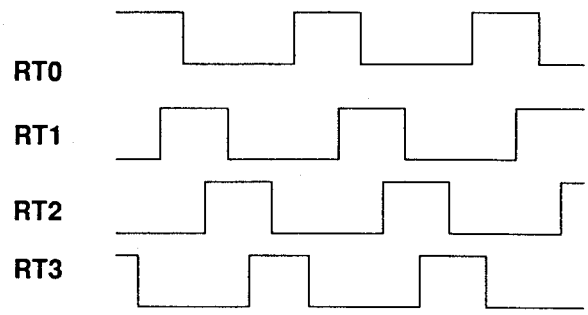

Pulse Rate Chart

Relation between the printing mode and the pulse rate is shown in the chart.

| Printing Mode | | Pulse Rate (PPS) | Current Control |
|---|---|---|---|
| | | | P30 |
| Holding State | | 0 | H |
| DRAFT | 10CPI | 1916 | L |
| | 12CPI | 1916 | L |
| | 15CPI | 1263 | H |
| | 17CPI | 958 | H |
| | 20CPI | 958 | H |
| LQ | 10CPI | 639 | H |
| | 12CPI | 639 | H |
| | 15CPI | 639 | H |
| | 17CPI | 639 | H |
| | 20CPI | 639 | H |

### 8.2.5 Paper Feed Motor Drive Block

During paper feed, the CPU sets P32 at the L level and turns on Q13 and Q14. +36V is fed to the motor as a result. The exciting method by P40, P41, P42 and P43 is1-2 driving system and the pulse rate is 792 pulse per second. When paper feed is not done, Q13 is turned off because of P32's H level signal and the power is not supplied to the motor.

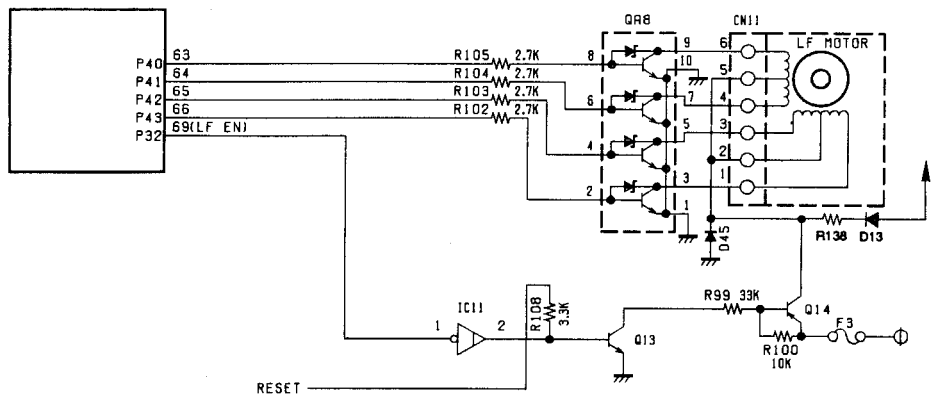


**Paper Feed Motor**

| Pin No. (CN11) | Resistance Value |
|---|---|
| 1-2 | 120 ± 2 ohms |
| 3-2 | 120 ± 2 ohms |
| 4-5 | 120 ± 2 ohms |
| 6-5 | 120 ± 2 ohms |

**Timing Chart**

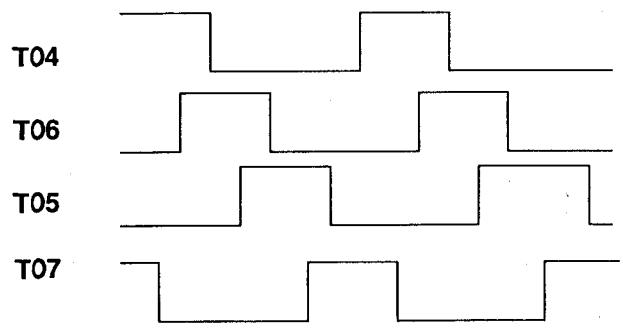

### 8.2.6 Head Drive Block

This block consists of QA1-6 and Q5-10. QA1-6 control each pin and Q5-10 control the power supplied to the printhead.
The CPU sets the data to be printed into H1-H24 of IC2(Gate Array). Then the CPU sets the printing pulse and triggers TC100 and TC102 terminal of IC1. During this time, the head pin solenoids are fired by QA1-6 according to the data. The power supplied to the printhead is controlled by P21 and P23 through Q5 and Q6.
Thermistor is attached in the printhead and is used for detecting overheat of printhead in directly.

Timing Chart

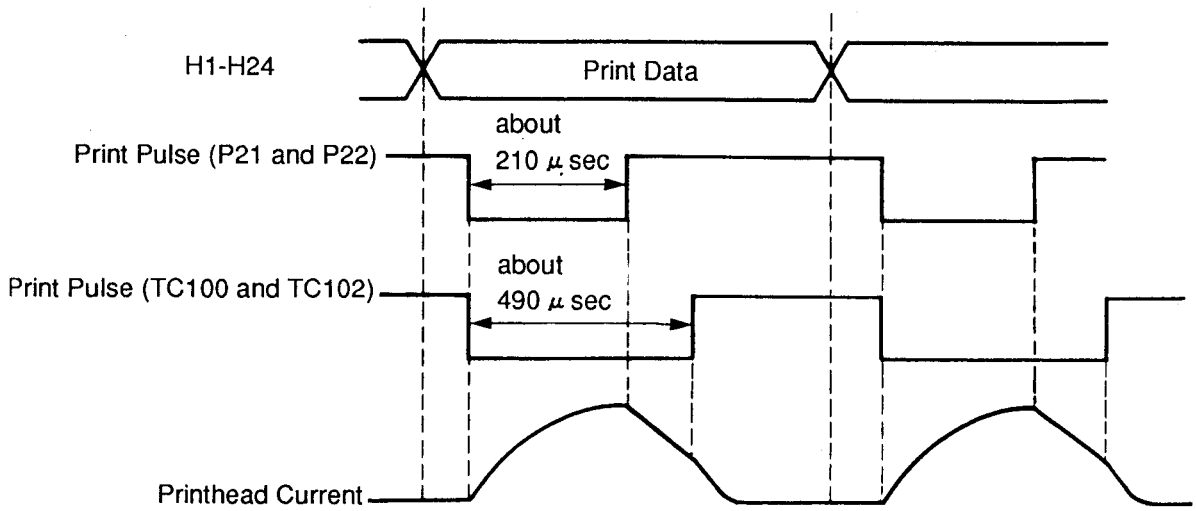


Printhead

| Pin No. (CN9,10) | Resistance Value | Pin No. (CN9,10) | Resistance Value | Pin No. (CN9,10) | Resistance Value |
|---|---|---|---|---|---|
| 2-1 | 20±1 ohms | 16-14 | 20±1 ohms | 39-27 | 20±1 ohms |
| 4-1 | 20±1 ohms | 11-18 | 20±1 ohms | 40-27 | 20±1 ohms |
| 3-6 | 20±1 ohms | 13-18 | 20±1 ohms | 28-30 | 20±1 ohms |
| 5-6 | 20±1 ohms | 15-21 | 20±1 ohms | 29-30 | 20±1 ohms |
| 8-7 | 20±1 ohms | 20-21 | 20±1 ohms | 31-37 | 20±1 ohms |
| 10-7 | 20±1 ohms | 25-24 | 20±1 ohms | 38-37 | 20±1 ohms |
| 22-12 | 20±1 ohms | 36-24 | 20±1 ohms | 33-35 | 46±5K ohms |
| 23-12 | 20±1 ohms | 32-26 | 20±1 ohms | | |
| 9-14 | 20±1 ohms | 34-26 | 20±1 ohms | | |

## Circuit Diagram

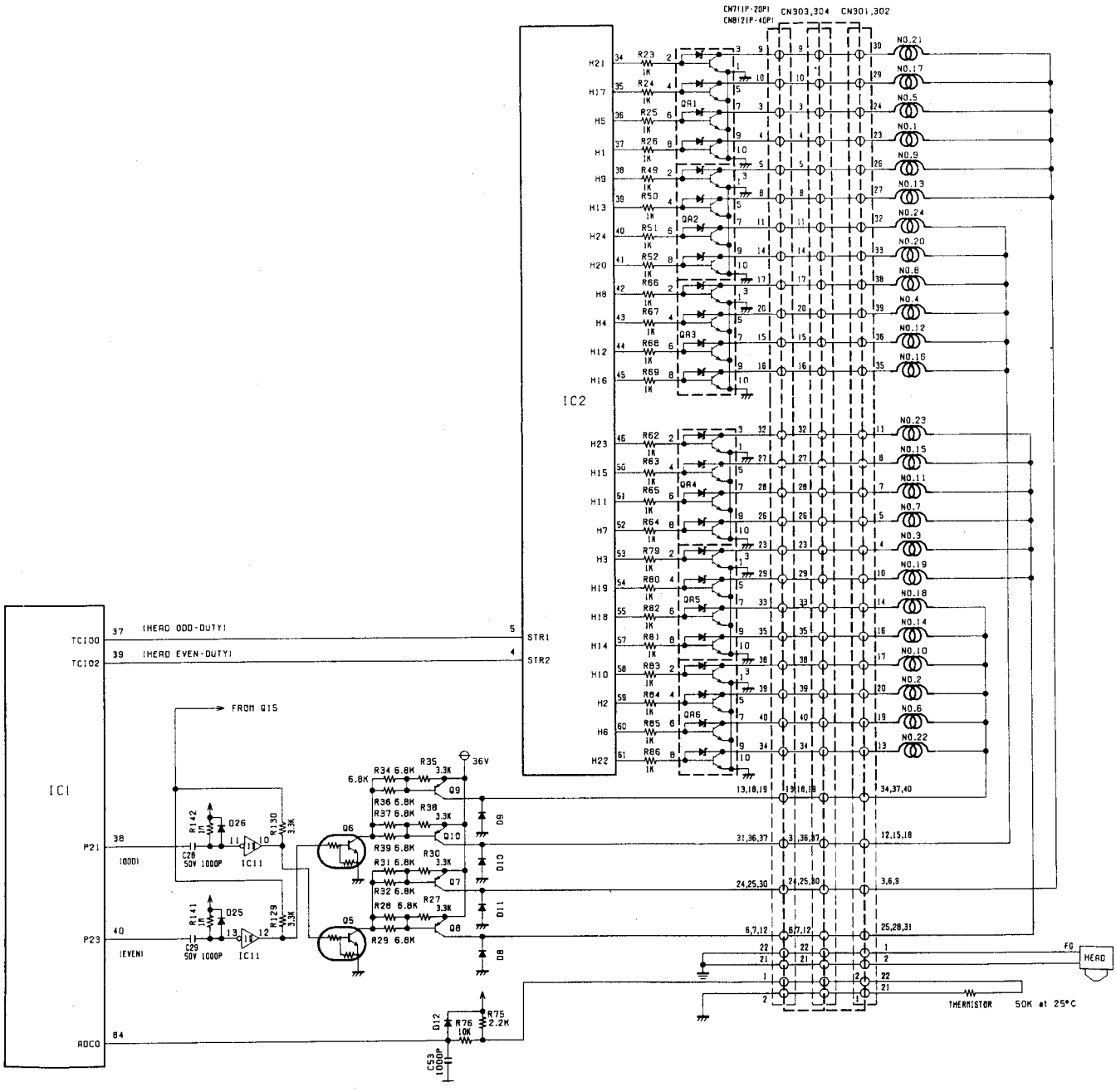

### 8.2.7 Sensor and Switch Circuits

(1) The home position sensor is for the purpose of moving the carriage to reference position (home position) at the left end of the carriage when the power switch is turned on or reset signal is generated. When the carriage comes to the home position, TRxC (pin ⑨① ) changes from L to H level.

(2) Two paper out sensors are provided. In case of rear tractor paper feed or bottom paper feed, P27 (pin ④⑦ ) changes L to H level and LED flashes to indicate paper out ststus when rear paper end sensors detects paper out. In case of friction paper feed, IRQ2 (pin ④⑥ ) is used for detecting paper out.

(3) When paper feed select switch is set to the friction position, P17 (pin ⑧② ) is at H level. When it is set to the tractor position, P17 is at L level.

(4) When the paper bail lever is pulled, ADC2 (pin ⑧⑥ ) is at L level and printer loads paper automatically.

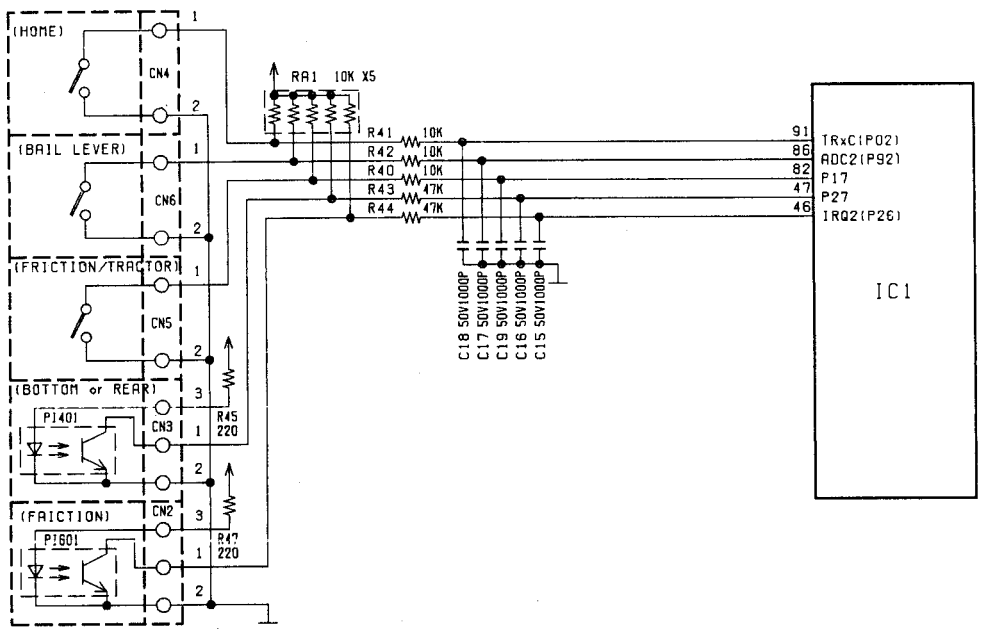

### 8.2.8 Control Panel

The control panel is composed of 5 switches and 12 LEDs.

(1) The ON LINE switch switches between on-line and off-line, and is input to the CPU (pin ⑦⑨ ). This switch is also used for continuous paper back in the function mode.

(2) The paper feed switch is for one-line paper feed and is input to the CPU (pin ④⑤ ). This switch is also used for driving the carriage to the right in the function mode.

(3) The form feed switch is for one page-feed and is input to the CPU (pin ⑧⑤ ). This switch is also used for driving the carriage to the left in the function mode.

(4) The function switch switches between the function mode and the normal operation mode. In the function mode,continuous paper back function and margin sets are available.

(5) The power/paper out LED lights when power is turned on and blinks when paper out is detected.

(6) The ON LINE LED displays the on-line status.

(7) Three ROW LEDs and six COLUMN LEDs display print mode by matrix.

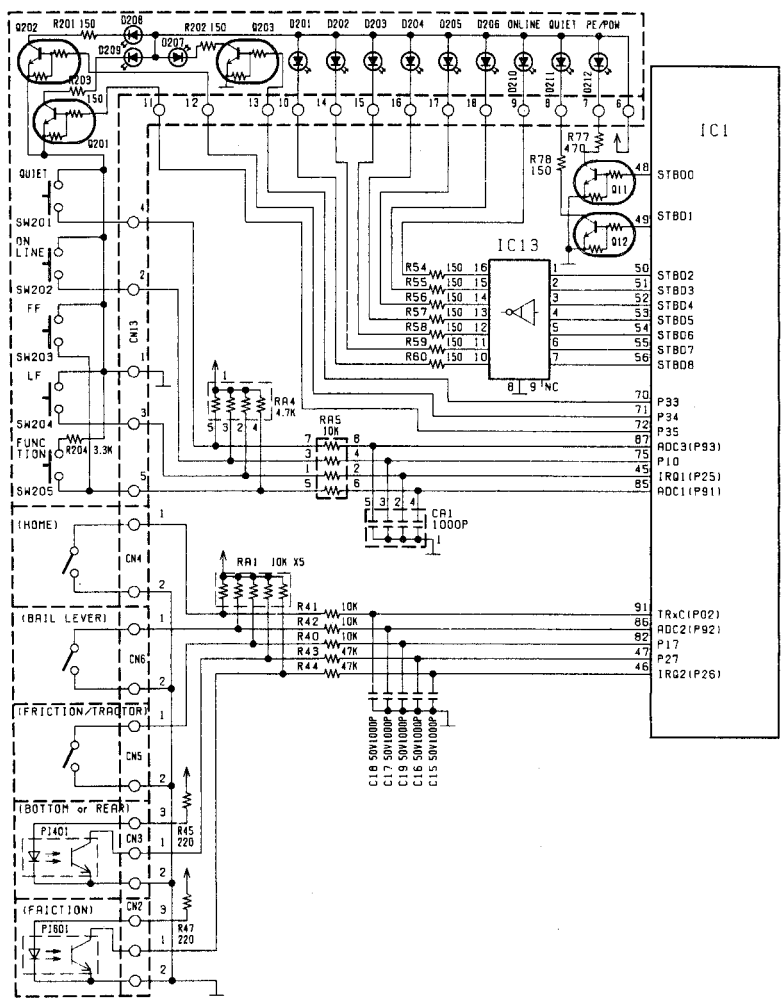

### 8.2.9 Logic Board Connection Diagram

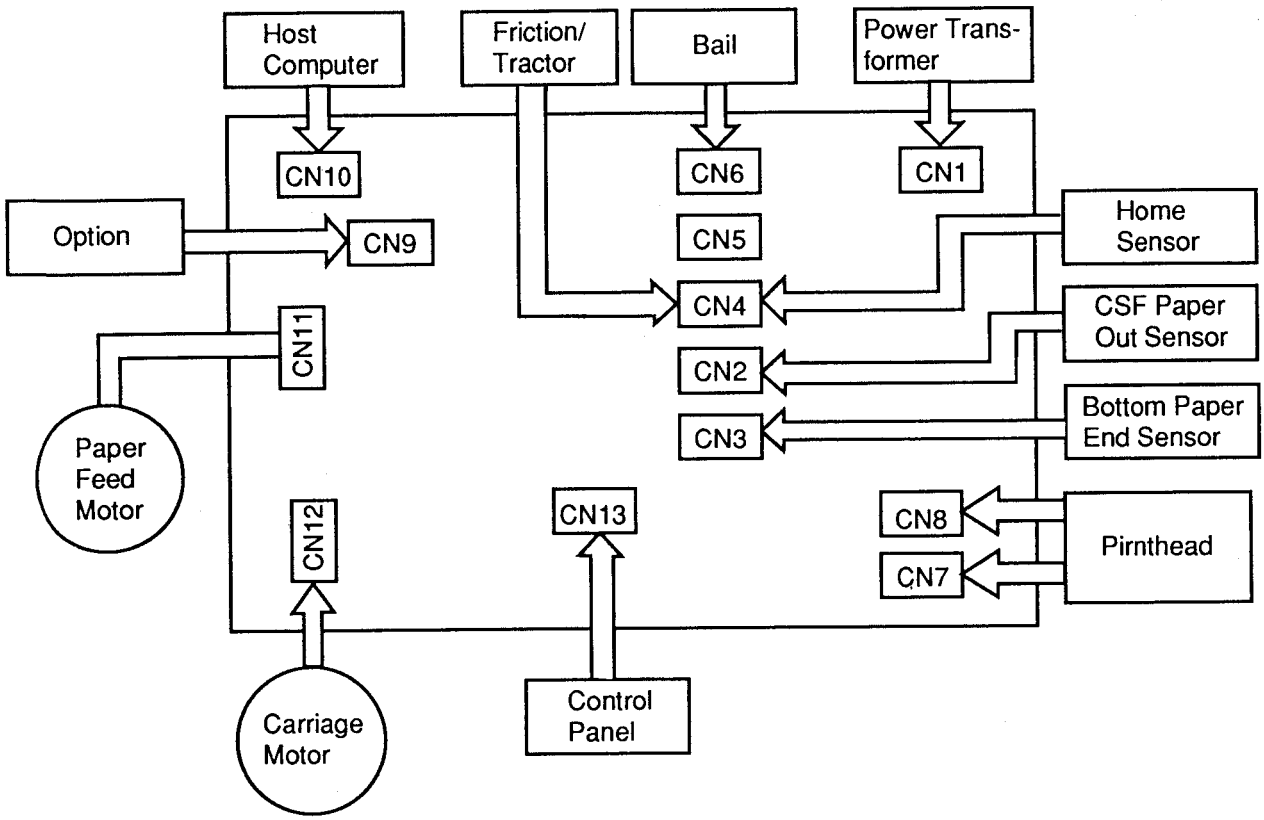

## 8.3 Explanation of Connectors

### 8.3.1 Name of Connectors

Connector applications are shown below. For datails, refer to tables.

| | | | |
|---|---|---|---|
| CN1 | : Power Supply | CN8,304 | : Printhead |
| CN2 | : CSF Paper Out Sensor | CN9 | : Option I/O |
| CN3 | : Bottom/Rear Paper Out Sensor | CN10 | : Centronics I/O |
| CN4 | : Carriage Home Switch | CN11 | : Paper Feed Motor |
| CN5 | : Friction/Tractor Switch | CN12 | : Carriage Motor |
| CN6 | : Bail Switch | CN13,201 | : Control Panel |
| CN7,303 | : Printhead | CN301,302 | : Printhead |

### 8.3.2 Pin Assignment

CN1 (Power Supply)

| Pin No. | Signal Name | Description | In/ Out |
|---|---|---|---|
| 1 | AC 42V | For Main Board | — |
| 2 | AC 42V | For Main Board | — |
| 3 | AC 10V | For Optional Board | — |
| 4 | AC 10V | For Optional Board | — |

CN5 (Friction / Tractor Switch)

| Pin No. | Signal Name | Description | In/ Out |
|---|---|---|---|
| 1 | SW | Friction / Tractor Switch | In |
| 2 | SG | Signal Ground | — |

CN6 (Bail Switch)

| Pin No. | Signal Name | Description | In/ Out |
|---|---|---|---|
| 1 | SW | Bail Switch | In |
| 2 | SG | Signal Ground | — |

CN4 (Carriage Home Switch)

| Pin No. | Signal Name | Description | In/ Out |
|---|---|---|---|
| 1 | SW | Carriage Home Switch | In |
| 2 | SG | Signal Ground | — |

CN2 (CSF Paper Out Sensor)

| Pin No. | Signal Name | Description | In/ Out |
|---|---|---|---|
| 1 | Collector | Paper Out Sensor | In |
| 2 | Cathode | Signal Ground | — |
| 3 | Anode | +5V Supply | Out |

CN3 (Bottom/Rear Paper Out Sensor)

| Pin No. | Signal Name | Description | In/ Out |
|---|---|---|---|
| 1 | Collector | Paper Out Sensor | In |
| 2 | Cathode | Signal Ground | — |
| 3 | Anode | +5V Supply | Out |

CN12 (Carriage Motor)

| Pin No. | Signal Name | Description | In/ Out |
|---|---|---|---|
| 1 | CRD | Phase D for Carriage Motor | In |
| 2 | SCR | Carriage Motor Power Supply | Out |
| 3 | CRC | Phase C for Carriage Motor | In |
| 4 | CRB | Phase B for Carriage Motor | In |
| 5 | SCR | Carriage Motor Power Supply | Out |
| 6 | CRA | Phase A for Carriage Motor | In |

CN11 (Paper Feed Motor)

| Pin No. | Signal Name | Description | In/ Out |
|---|---|---|---|
| 1 | LFD | Phase D for Line Feed Motor | In |
| 2 | SLF | Line Feed Motor Power Supply | Out |
| 3 | LFC | Phase C for Line Feed Motor | In |
| 4 | LFB | Phase B for Line Feed Motor | In |
| 5 | SLF | Line Feed Motor Power Supply | Out |
| 6 | LFA | Phase A for Line Feed Motor | In |

CN13,CN201 (Control Panel)

| Pin No. | Signal Name | Description | In/ Out |
|---|---|---|---|
| 1 | SG | Signal Ground | —— |
| 2 | ON LINE | SET/ON LINE Switch | In |
| 3 | LF | LF/COLUMN Switch | In |
| 4 | ET | QUIET/P.CUT Switch | In |
| 5 | FF | FF/ROW Switch | In |
| 6 | +5V | +5V Supply | Out |
| 7-18 | DATA | LED DATA In | In |

CN301,CN302 (Printhead)

| Pin No. | Signal Name | Description | In/ Out |
|---|---|---|---|
| 1 | FG | Frame Ground | —— |
| 2 | FG | Frame Ground | —— |
| 3 | +36V | +36V for Pin 1,5,9,13,17,21 | Out |
| 4 | H3 | Head Pin 3 Drive | In |
| 5 | H7 | Head Pin 7 Drive | In |
| 6 | +36V | +36V for Pin 1,5,9,13,17,21 | Out |
| 7 | H11 | Head Pin 11 Drive | In |
| 8 | H15 | Head Pin 15 Drive | In |
| 9 | +36V | +36V for Pin 1,5,9,13,17,21 | Out |
| 10 | H19 | Head Pim 19 Drive | In |
| 11 | H23 | Head Pin 23 Drive | In |
| 12 | +36V | +36V for Pin 4,8,12,16,20,24 | Out |
| 13 | H22 | Head Pin 22 Drive | In |
| 14 | H18 | Head Pin 18 Drive | In |
| 15 | +36V | +36V for Pin 4,8,12,16,20,24 | Out |
| 16 | H14 | Head Pin 14 Drive | In |
| 17 | H10 | Head Pin 10 Drive | In |
| 18 | +36V | +36V for Pin 4,8,12,16,20,24 | Out |
| 19 | H6 | Head Pin 6 Drive | In |
| 20 | H2 | Head Pin 2 Drive | In |
| 21 | SG | Signal Ground | —— |
| 22 | OHP | Overheat Protector | In |
| 23 | H1 | Head Pin 1 Drive | In |
| 24 | H5 | Head Pin 5 Drive | In |
| 25,28,31 | +36V | +36V for Pin 3,7,11,15,19,23 | Out |
| 26 | H9 | Head Pin 9 Drive | In |
| 27 | H13 | Head Pin 13 Drive | In |
| 29 | H17 | Head Pin 17 Drive | In |
| 30 | H21 | Head Pin 21 Drive | In |
| 32 | H24 | Head Pin 24 Drive | In |
| 33 | H20 | Head Pin 20 Drive | In |
| 34,37,40 | +36V | +36V for Pin 2,6,10,14,18,22 | Out |
| 35 | H16 | Head Pin 16 Drive | In |
| 38 | H8 | Head Pin 8 Drive | In |
| 39 | H4 | Head Pin 4 Drive | In |

CN7,CN303 (Printhead)

| Pin No. | Signal Name | Description | In/ Out |
|---|---|---|---|
| 1 | OHP | Overheat Protector | In |
| 2 | SG | Signal Ground | —— |
| 3 | H5 | Head Pin 5 Drive | In |
| 4 | H1 | Head Pin 1 Drive | In |
| 5 | H9 | Head Pin 9 Drive | In |
| 6 | +36V | +36V for Pin 3,7,11,15,19,23 | Out |
| 7 | +36V | +36V for Pin 3,7,11,15,19,23 | Out |
| 8 | H13 | Head Pin 13 Drive | In |
| 9 | H21 | Head Pin 21 Drive | In |
| 10 | H17 | Head Pin 17 Drive | In |
| 11 | H24 | Head Pin 24 Drive | In |
| 12 | +36V | +36V for Pin 3,7,11,15,19,23 | Out |
| 13 | +36V | +36V for Pin 2,6,10,14,18,22 | Out |
| 14 | H20 | Head Pin 20 Drive | In |
| 15 | H12 | Head Pin 12 Drive | In |
| 16 | H16 | Head Pin 16 Drive | In |
| 17 | H8 | Head Pin 8 Drive | In |
| 18 | +36V | +36V for Pin 2,6,10,14,18,22 | Out |
| 19 | +36V | +36V for Pin 2,6,10,14,18,22 | Out |
| 20 | H4 | Head Pin 4 Drive | In |

CN8,CN304 (Printhead)

| Pin No. | Signal Name | Description | In/ Out |
|---|---|---|---|
| 1 | FG | Frame Ground | —— |
| 2 | FG | Frame Ground | —— |
| 3 | H3 | Head Pin 3 Dirve | In |
| 4 | +36V | +36V for Pin 1,5,9,13,17,21 | Out |
| 5 | +36V | +36V for Pin 1,5,9,13,17,21 | Out |
| 6 | H7 | Head Pin 7 Drive | In |
| 7 | H15 | Head Pin 15 Drive | In |
| 8 | H11 | Head Pin 11 Drive | In |
| 9 | H19 | Head Pin 19 Drive | In |
| 10 | +36V | +36V for Pin 1,5,9,13,17,21 | Out |
| 11 | +36V | +36V for Pin 4,8,12,16,20,24 | Out |
| 12 | H23 | Head Pin 23 Drive | In |
| 13 | H18 | Head Pin 18 Drive | In |
| 14 | H22 | Head Pin 22 Drive | In |
| 15 | H14 | Head Pin 14 Drive | In |
| 16 | +36V | +36V for Pin 4,8,12,16,20,24 | Out |
| 17 | +36V | +36V for Pin 4,8,12,16,20,24 | Out |
| 18 | H10 | Head Pin 10 Drive | In |
| 19 | H2 | Head Pin 2 Drive | In |
| 20 | H6 | Head Pin 6 Drive | In |

CN10 (Centronics I/O)

| Pin No. | Return Side Pin No. | Signal Name | Description | I/O |
|---|---|---|---|---|
| 1 | 19 | $\overline{STB}$ | Strobe | In |
| 2 | 20 | DATA 1 | Parallel DATA 1 | In |
| 3 | 21 | DATA 2 | Parallel DATA 2 | In |
| 4 | 22 | DATA 3 | Parallel DATA 3 | In |
| 5 | 23 | DATA 4 | Parallel DATA 4 | In |
| 6 | 24 | DATA 5 | Parallel DATA 5 | In |
| 7 | 25 | DATA 6 | Parallel DATA 6 | In |
| 8 | 26 | DATA 7 | Parallel DATA 7 | In |
| 9 | 27 | DATA 8 | Parallel DATA 8 | In |
| 10 | 28 | $\overline{ACK}$ | Acknowledge | Out |
| 11 | 29 | BUSY | Busy | Out |
| 12 | | PE | Paper End | Out |
| 13 | | SLCT | Select | Out |
| 14 | | $\overline{AFXT}$ | Auto Feed XT | In |
| 15 | | —— | —— | —— |
| 16 | | SG | Signal Ground | —— |
| 17 | | FG | Frame Ground | —— |
| 18 | | +5V | +5V | Out |
| 31 | 30 | $\overline{PRIME}$ | Prime | In |
| 32 | | $\overline{ERROR}$ | Error | Out |
| 33 | | SG | Signal Ground | —— |
| 34 | | —— | —— | —— |
| 35 | | —— | —— | —— |
| 36 | | —— | —— | —— |
| 19-30 | | SG | Signal Ground | —— |

CN 9 (Option I/O)

| Pin No. | Signal Name | Description | I/O |
|---|---|---|---|
| 1 | AC 10V | AC 10V for Serial Option | |
| 2 | AC10V | AC 10V for Serial Option | |
| 3 | SG | Signal Ground | |
| 4 | SG | Siganal Ground | |
| 5 | SIF | Check of Option Board | In |
| 6 | $\overline{AFXT}$ | $\overline{Auto\ Feed\ XT}$ | In |
| 7 | SLCT | Select | Out |
| 8 | PE | Paper End Sensor | Out |
| 9 | $\overline{ERROR}$ | $\overline{Error}$ | Out |
| 10 | BUSY | Busy | Out |
| 11 | $\overline{ACK}$ | $\overline{Acknowledge}$ | Out |
| 12 | $\overline{PRIME}$ | $\overline{Prime}$ | In |
| 13 | $\overline{STB}$ | $\overline{Strobe}$ | In |
| 14 | +5V | +5V Supply | Out |
| 15 | +5V | +5V Supply | Out |
| 16 | T x D | Transmitted Data | Out |
| 17 | DATA 8 | Parallel DATA 8 | In |
| 18 | DATA 7 | Parallel DATA 7 | In |
| 19 | DATA 6 | Parallel DATA 6 | In |
| 20 | DATA 5 | Parallel DATA 5 | In |
| 21 | DATA 4 | Parallel DATA 4 | In |
| 22 | DATA 3 | Parallel DATA 3 | In |
| 23 | DATA 2 | Parallel DATA 2 | In |
| 24 | DATA 1 | Parallel DATA 1 | In |
| 25 | RESET | Reset to Option | Out |
| 26 | SCK | Serial Clock | In |
| 27 | R x D | Received Data | In |
| 28 | —— | Not Used | |

## 8.4 IC Pin Configuration

### 8.4.1 Logic Symbol Chart

| Positive Logic | Negative Logic | Truth Table |
|---|---|---|
| NOT<br>A — C<br>$C=\overline{A}$ | A — C<br>$C=\overline{A}$ | A C<br>L H<br>H L |
| BUFFER<br>A — C<br>$C=A$ | A — C<br>$C=A$ | A C<br>L L<br>H H |
| AND<br>A B — C<br>$C=AB$ | INVERT-NOR<br>A B — C<br>$C=\overline{\overline{A}+\overline{B}}$ | A B C<br>L L L<br>L H L<br>H L L<br>H H H |

| Positive Logic | Negative Logic | Truth Table |
|---|---|---|
| NAND<br>A B — C<br>$C=\overline{AB}$ | INVERT-OR<br>A B — C<br>$C=\overline{A}+\overline{B}$ | A B C<br>L L H<br>L H H<br>H L H<br>H H L |
| OR<br>A B — C<br>$C=A+B$ | INVERT-NAND<br>A B — C<br>$C=\overline{\overline{A}\overline{B}}$ | A B C<br>L L L<br>L H H<br>H L H<br>H H H |
| NOR<br>A B — C<br>$C=\overline{A+B}$ | INVERT-AND<br>A B — C<br>$C=\overline{A}\overline{B}$ | A B C<br>L L H<br>L H L<br>H L L<br>H H L |

### 8.4.2 Pin Configuration

IC3 (AN8081K)

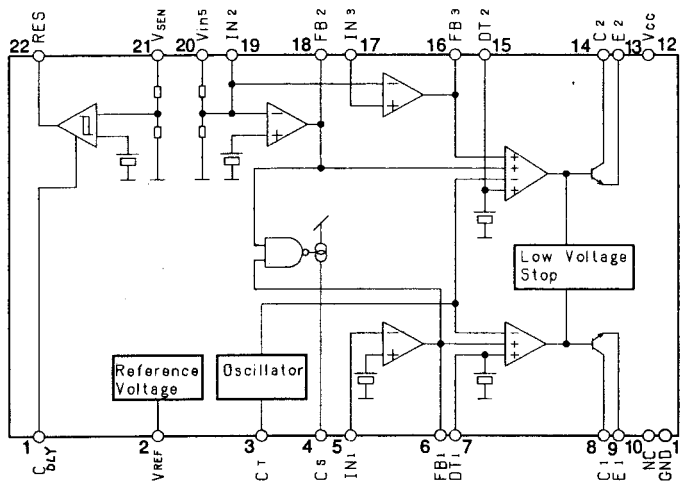


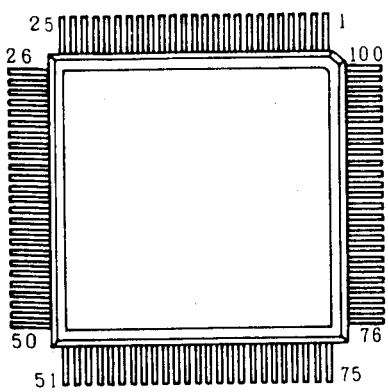


IC1 CPU
(MN18806)

IC2 Gate Array
(MN51005QPU)

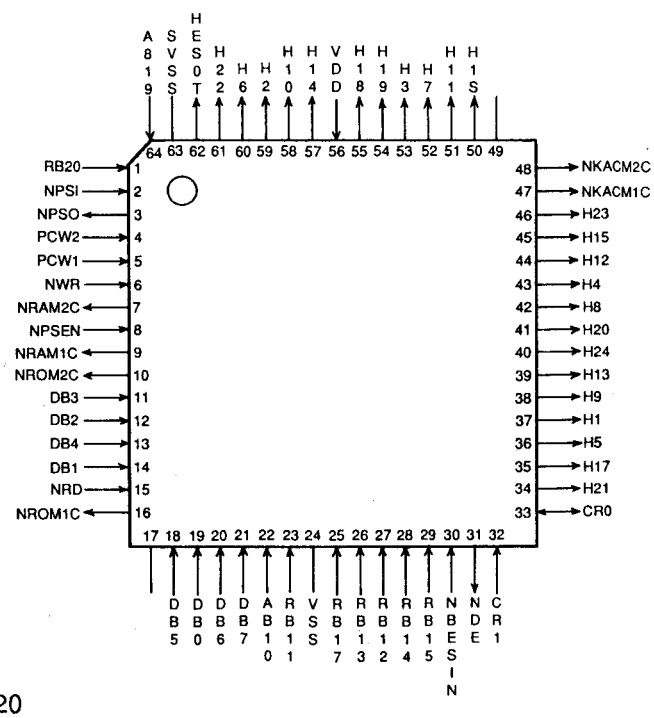

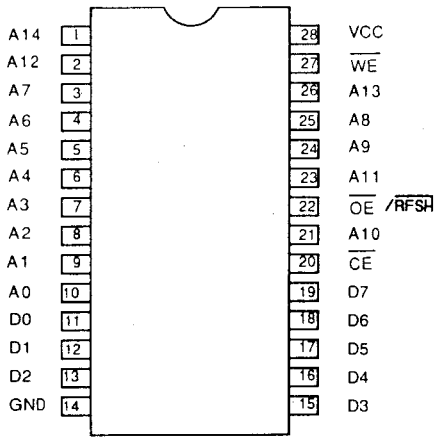


IC5 RAM
(HM65256B,TC51832)

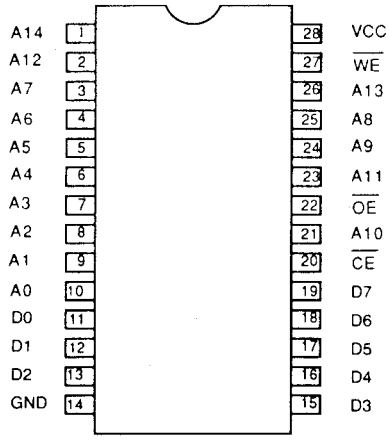


IC6
(MB84256)
Option

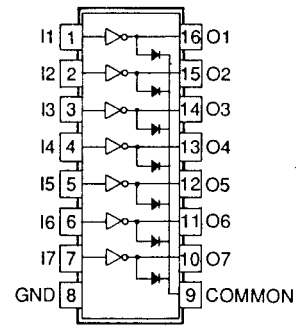


IC13
(MC1413P)

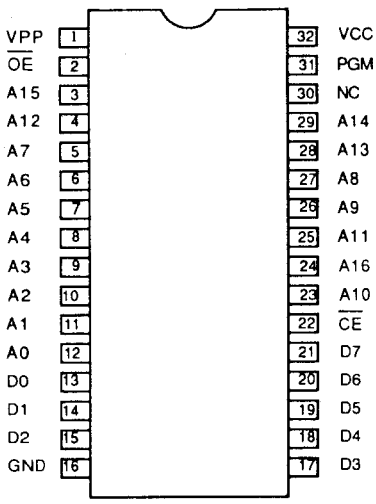


IC7 EP ROM
1M bit (HN27C101AG)

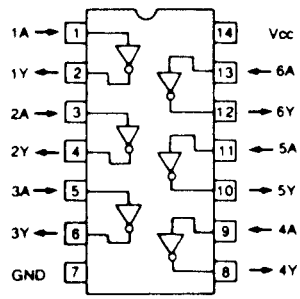


IC11
(74HC05)
IC8
(74LS06P)

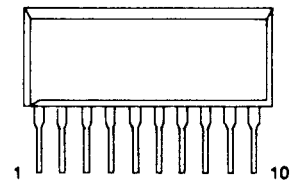


QA1-6,8
(STA401A)

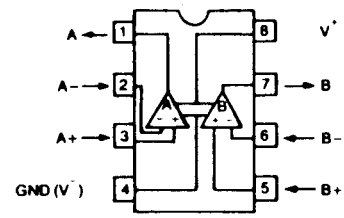


IC12
(LM393)

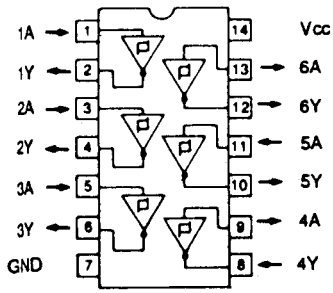


IC9
(74LS14P)

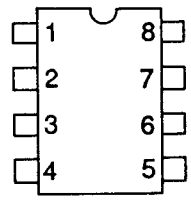


IC10
(24C01A/P)

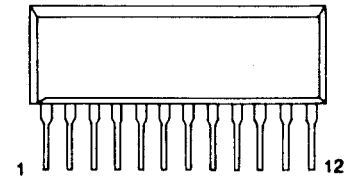


QA7
(MP4301)

## 8.4.3 Pin Assignment

IC1 CPU (MN18806)

| Pin No. | Symbol | Function | IIn/ Out |
|---|---|---|---|
| 1 | HS6 | Data7 | In |
| 2 | HS7 | Data 8 | In |
| 3 | A20 | Not Used | Out |
| 4 | A19 | Not Used | Out |
| 5 | A18 | Not Used | Out |
| 6 | A17 | Not Used | Out |
| 7 | A16 | Address Bus 16 Out | Out |
| 8 | Vss | Ground | In |
| 9 | A15 | Address Bus 15 Out | Out |
| 10 | A14 | Address Bus 14 Out | Out |
| 11 | A12 | Address Bus 12 Out | Out |
| 12 | A13 | Address Bus 13 Out | Out |
| 13 | A7 | Address Bus 7 Out | Out |
| 14 | A8 | Address Bus 8 Out | Out |
| 15 | A6 | Address Bus 6 Out | Out |
| 16 | A9 | Address Bus 9 Out | Out |
| 17 | A5 | Address Bus 5 Out | Out |
| 18 | A11 | Address Bus 11 Out | Out |
| 19 | A4 | Address Bus 4 Out | Out |
| 20 | A3 | Address Bus 3 Out | Out |
| 21 | A10 | Address Bus 10 Out | Out |
| 22 | A2 | Address Bus 2 Out | Out |
| 23 | A1 | Address Bus 1 Out | Out |
| 24 | A0 | Address Bus 0 Out | Out |
| 25 | D7 | Data Bus 7 | In/Out |
| 26 | D6 | Data Bus6 | In/Out |
| 27 | D0 | Data Bus 0 | In/Out |
| 28 | D5 | Data Bua5 | In/Out |
| 29 | D1 | Data Bus1 | In/Out |
| 30 | D4 | Data Bus 4 | In/Out |
| 31 | D2 | Data Bus2 | In/Out |
| 32 | D3 | Data Bus 3 | In/Out |
| 33 | $V_{DD}$ | +5V | In |
| 34 | $\overline{PSEN}$ | $\overline{Program\ Store\ Enable}$ | Out |
| 35 | $\overline{RE}$ | $\overline{Read\ Enable}$ | Out |
| 36 | $\overline{WE}$ | $\overline{Write\ Enable}$ | Out |
| 37 | P20 | FF Switch | In |
| 38 | TCIO1 | $\overline{Head\ Power}$ | Out |
| 39 | TCIO2 | Buzzer Out | Out |
| 40 | P23 | Home Sensor | In |
| 41 | Vss | Ground | In |
| 42 | OSC1 | OSC In | In |
| 43 | OSC2 | OSC Out | Out |
| 44 | IRQ0 | $\overline{Prime}$ | |
| 45 | IRQ1 | Overload Sensor | In |
| 46 | IRQ2 | Cover Switch | In |
| 47 | P27 | $E^2P$ ROM Data Out | In |
| 48 | STB0 | Head Print Data 8/$E^2P$ ROM Data In | Out |
| 49 | STB1 | Head Print Data 7/$E^2P$ ROM CLK | Out |
| 50 | STB2 | Head Print Data 6 | |

| Pin No. | Symbol | Function | IIn/ Out |
|---|---|---|---|
| 51 | STB3 | Head Print Data 5 | Out |
| 52 | STB4 | Head Print Data 4 | Out |
| 53 | STB5 | Head Print Data 3 | Out |
| 54 | STB6 | Head Print Data 2 | Out |
| 55 | STB8 | Head Print Data 1 | Out |
| 56 | STB8 | Head Print Data 9 | Out |
| 57 | RT0 | Carriage Motor A | Out |
| 58 | RT1 | Carriage Motor B | Out |
| 59 | RT2 | Not Used | Out |
| 60 | RT3 | Not Used | Out |
| 61 | RST | Reset In | In |
| 62 | $V_{DD}$ | +5V | In |
| 63 | P40 | IC201 Data | Out |
| 64 | P41 | IC201 Clock | Out |
| 65 | P42 | IC201 Load | Out |
| 66 | P43 | $E^2P$ ROM CS | Out |
| 67 | P30 | Line Feed Motor A | Out |
| 68 | P31 | Line Feed Motor B | Out |
| 69 | P32 | $\overline{LF\ Enable}$ | Out |
| 70 | P33 | $\overline{CR\ Enable}$ | Out |
| 71 | P34 | CR Power Control 1 | Out |
| 72 | P35 | CR Power Control 2 | Out |
| 73 | P36 | Friction Paper End Sensor | In |
| 74 | P37 | Rear Paper End Sensor | In |
| 75 | P10 | Bottom Paper End Sensor | In |
| 76 | P11 | $\overline{LF\ Switch}$ | In |
| 77 | P12 | $\overline{ON\ LINE\ Switch}$ | In |
| 78 | P13 | SELECT | Out |
| 79 | P14 | PE | Out |
| 80 | P15 | $\overline{ERROR}$ | Out |
| 81 | P16 | $\overline{AFXT}$ | In |
| 82 | P17 | SIF | In |
| 83 | Vss | Ground | In |
| 84 | ADC0 | Overheat Protector | In |
| 85 | ADC1 | ROW/COLUMN/SET Switch | In |
| 86 | ADC2 | FUNCTION/Bail Switch | In |
| 87 | ADC3 | Friction/Tractor Switch | In |
| 88 | $V_{DD}$ | +5V | In |
| 89 | TXD | TXD | Out |
| 90 | RXD | RXD | In |
| 91 | TRXC | Serial Clock | In |
| 92 | HSBSY | Busy to Host | Out |
| 93 | $\overline{HSACK}$ | $\overline{ACK\ to\ Host}$ | Out |
| 94 | $\overline{HSSTB}$ | $\overline{STB\ from\ Host}$ | In |
| 95 | HS0 | Data 1 | In |
| 96 | HS1 | Data 2 | In |
| 97 | HS2 | Data 3 | In |
| 98 | HS3 | Data 4 | In |
| 99 | HS4 | Data 5 | In |
| 100 | HS5 | Data 6 | In |

IC2 (Gate Array)

| Pin No. | Symbol | Function | In/ Out |
|---|---|---|---|
| 1 | AB20 | Address Bus 20 | In |
| 2 | PSI | Pseud In | In |
| 3 | PSO | Pseud Out | Out |
| 4 | POW2 | Power 2 | In |
| 5 | POW1 | Power 1 | In |
| 6 | WR | Write | Out |
| 7 | RAM2C | RAM2 Chip Enable | Out |
| 8 | PSEN | PSEN | In |
| 9 | RAM1C | RAM1 Chip Enable | Out |
| 10 | ROM2C | ROM2 Chip Enable | Out |
| 11 | DB3 | Data Bus 3 | In |
| 12 | DB2 | Data Bus 2 | In |
| 13 | DB4 | Data Bus 4 | In |
| 14 | DB1 | Data Bus 1 | In |
| 15 | RD | Read | Out |
| 16 | ROMIC | ROM1 Chip Enable | Out |
| 17 | NC | No Connection | — |
| 18 | DB5 | Data Bus 5 | In |
| 19 | DB0 | Data Bus 0 | In |
| 20 | DB6 | Data Bus 6 | In |
| 21 | DB7 | Data Bus 7 | In |
| 22 | AB10 | Address Bus 10 | In |
| 23 | AB11 | Address Bus 11 | In |
| 24 | Vss | Ground | — |
| 25 | AB17 | Address Bus 17 | In |
| 26 | AB13 | Address Bus 13 | In |
| 27 | AB12 | Address Bus 12 | In |
| 28 | AB14 | Address Bus 14 | In |
| 29 | AB15 | Address Bus 15 | In |
| 30 | RESIN | Reset In | In |
| 31 | OE | Output Enable | Out |
| 32 | CRI | CR In | In |

| Pin No. | Symbol | Function | In/ Out |
|---|---|---|---|
| 33 | CRO | CR Out | Out |
| 34 | H21 | Head Pin 21 | Out |
| 35 | H17 | Head Pin 17 | Out |
| 36 | H5 | Head Pin 5 | Out |
| 37 | H1 | Head Pin 1 | Out |
| 38 | H9 | Head Pin 9 | Out |
| 39 | H13 | Head Pin 13 | Out |
| 40 | H24 | Head Pin 24 | Out |
| 41 | H20 | Head Pin 20 | Out |
| 42 | H8 | Head Pin 8 | Out |
| 43 | H4 | Head Pin 4 | Out |
| 44 | H12 | Head Pin 12 | Out |
| 45 | H16 | Head Pin16 | Out |
| 46 | H23 | Head Pin 23 | Out |
| 47 | NC | No Connection | — |
| 48 | NC | No Connection | — |
| 49 | NC | No Connection | Out |
| 50 | H15 | Head Pin 15 | Out |
| 51 | H11 | Head Pin 11 | Out |
| 52 | H7 | Head Pin 7 | Out |
| 53 | H3 | Head Pin 3 | Out |
| 54 | H19 | Head Pin 19 | Out |
| 55 | H18 | Head Pin 18 | Out |
| 56 | VDD | +5V | — |
| 57 | H14 | Head Pin 14 | Out |
| 58 | H10 | Head Pin 10 | Out |
| 59 | H2 | Head Pin 2 | Out |
| 60 | H6 | Head Pin 6 | Out |
| 61 | H22 | Head Pin 22 | Out |
| 62 | RESO | Reset Out | Out |
| 63 | Vss | Ground | — |
| 64 | AB19 | Address Bus 19 | In |

## 8.5 Trouble Shooting Flow Chart

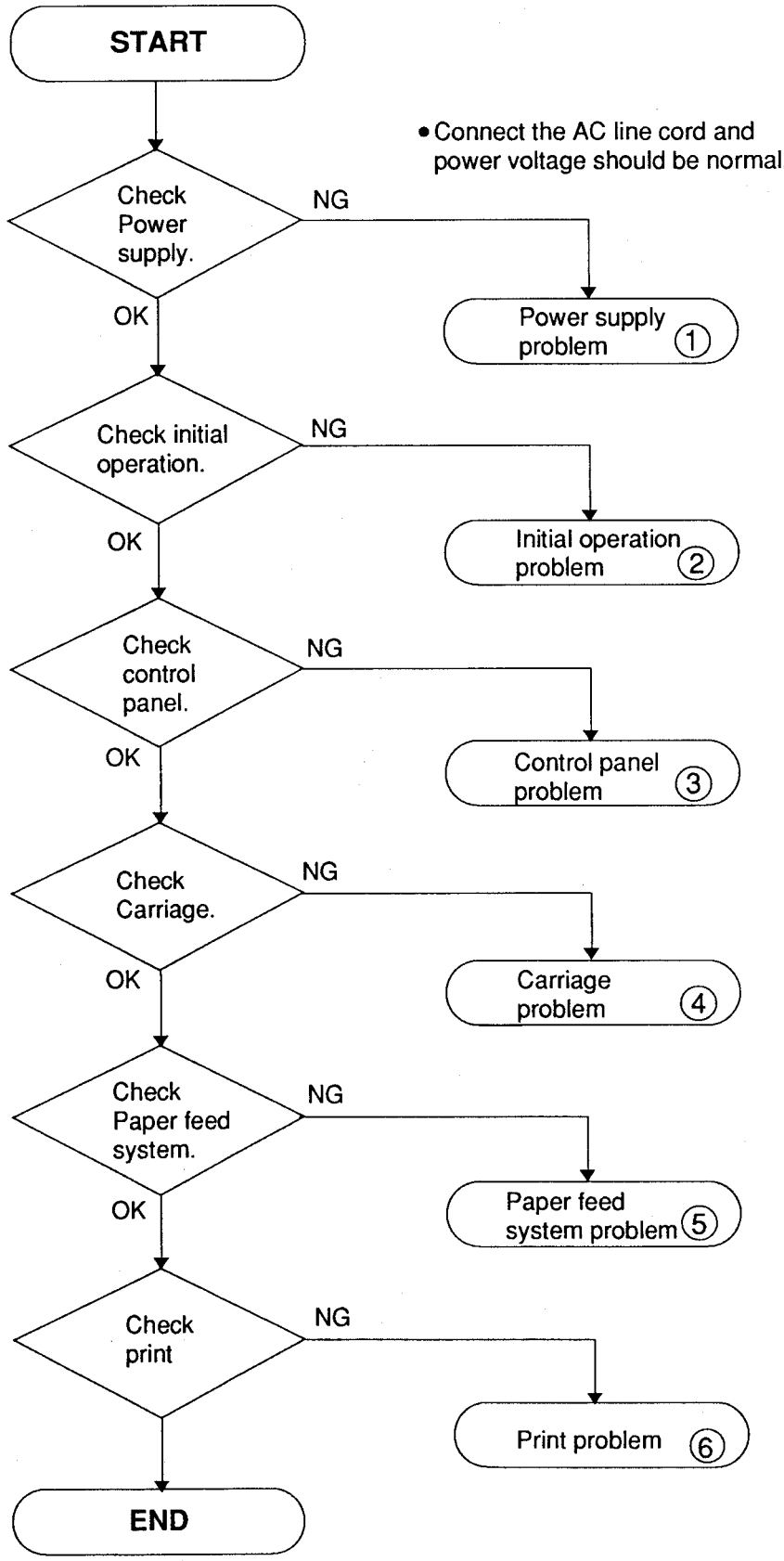

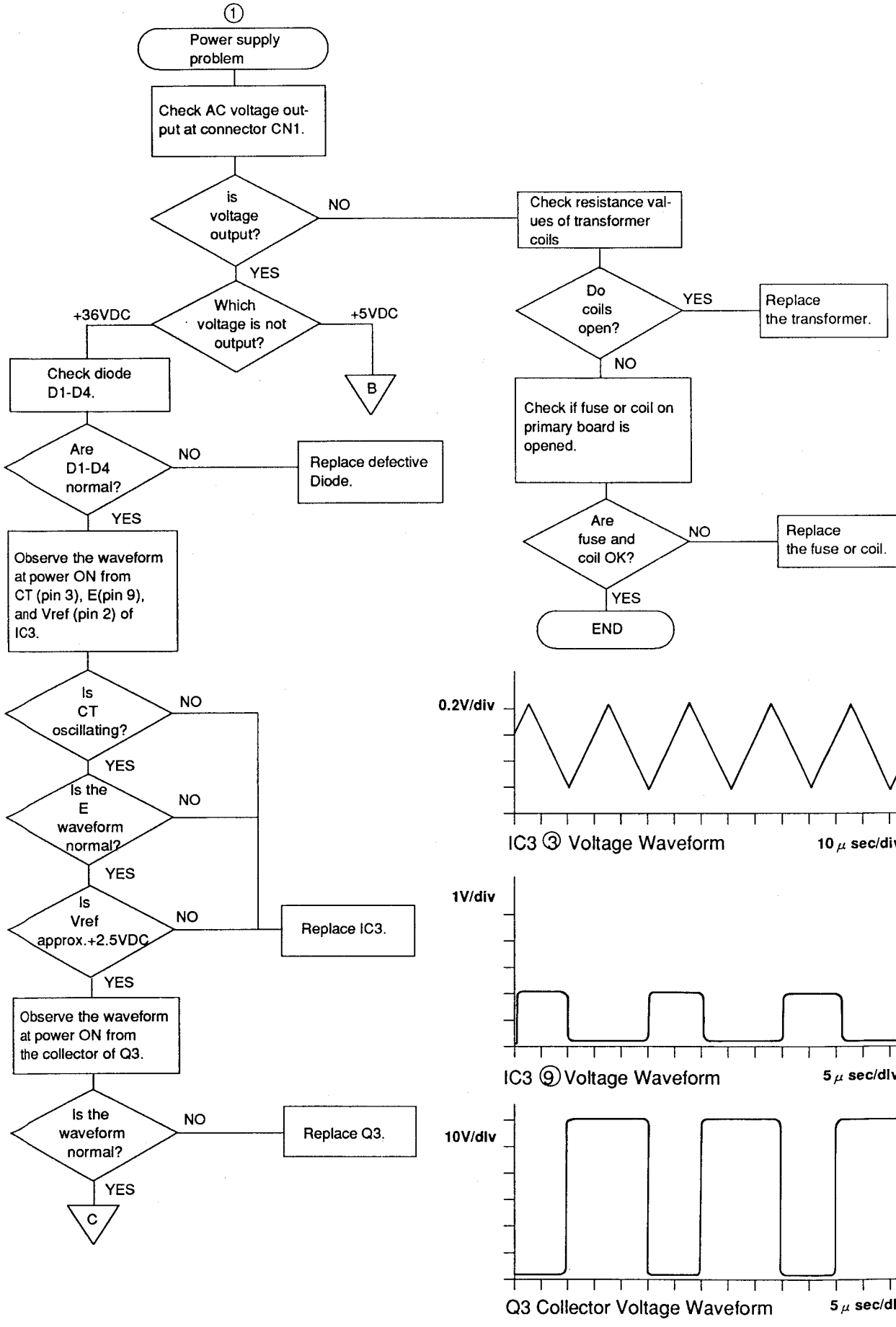
①
Power supply problem
Check AC voltage output at connector CN1.
is voltage output?
NO
Check resistance values of transformer coils
YES
Which voltage is not output?
+36VDC
+5VDC
B
Do coils open?
YES
Replace the transformer.
NO
Check diode D1-D4.
Check if fuse or coil on primary board is opened.
Are D1-D4 normal?
NO
Replace defective Diode.
YES
Are fuse and coil OK?
NO
Replace the fuse or coil.
YES
END
Observe the waveform at power ON from CT (pin 3), E(pin 9), and Vref (pin 2) of IC3.
Is CT oscillating?
NO
YES
Is the E waveform normal?
NO
YES
Is Vref approx.+2.5VDC
NO
Replace IC3.
YES
Observe the waveform at power ON from the collector of Q3.
Is the waveform normal?
NO
Replace Q3.
YES
C
0.2V/div
IC3 ③ Voltage Waveform
10 μ sec/div
1V/div
IC3 ⑨ Voltage Waveform
5 μ sec/div
10V/div
Q3 Collector Voltage Waveform
5 μ sec/div

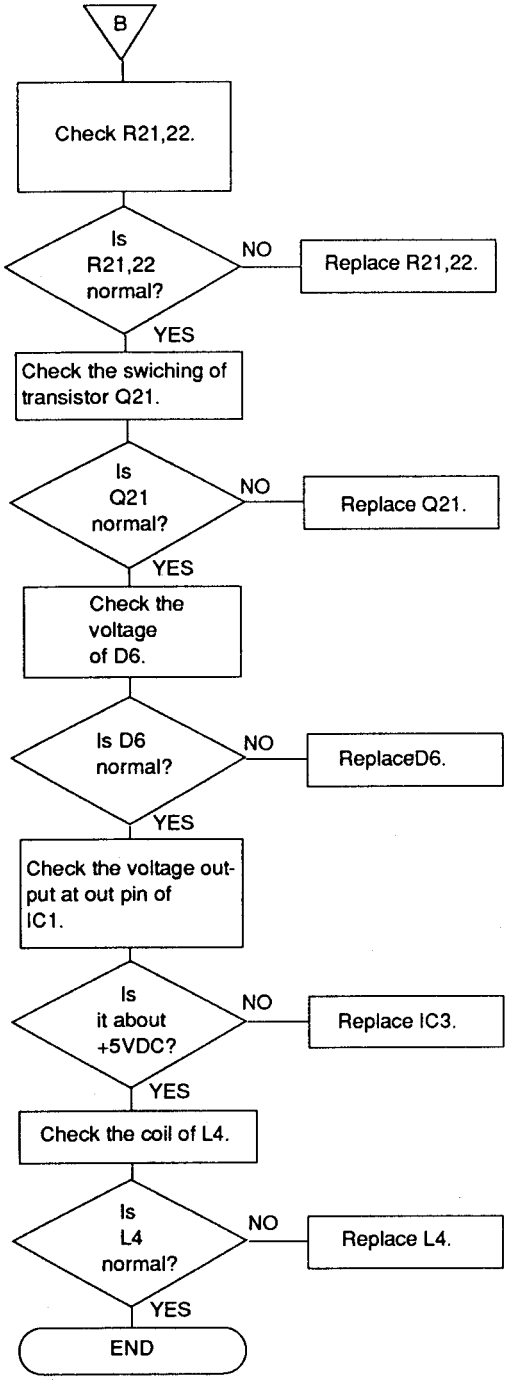
B
Check R21,22.
Is R21,22 normal?
NO
Replace R21,22.
YES
Check the swiching of transistor Q21.
Is Q21 normal?
NO
Replace Q21.
YES
Check the voltage of D6.
Is D6 normal?
NO
ReplaceD6.
YES
Check the voltage output at out pin of IC1.
Is it about +5VDC?
NO
Replace IC3.
YES
Check the coil of L4.
Is L4 normal?
NO
Replace L4.
YES
END

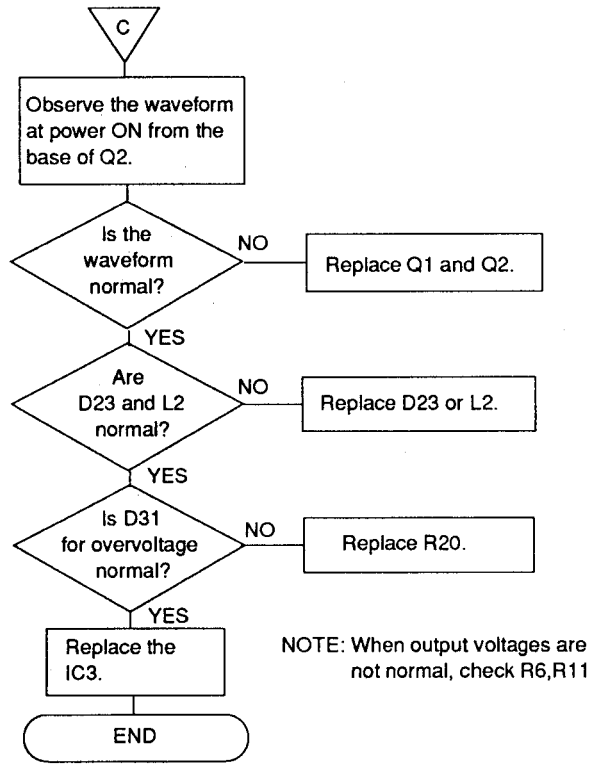
C
Observe the waveform at power ON from the base of Q2.
Is the waveform normal?
NO
Replace Q1 and Q2.
YES
Are D23 and L2 normal?
NO
Replace D23 or L2.
YES
Is D31 for overvoltage normal?
NO
Replace R20.
YES
Replace the IC3.
END
NOTE: When output voltages are not normal, check R6,R11.

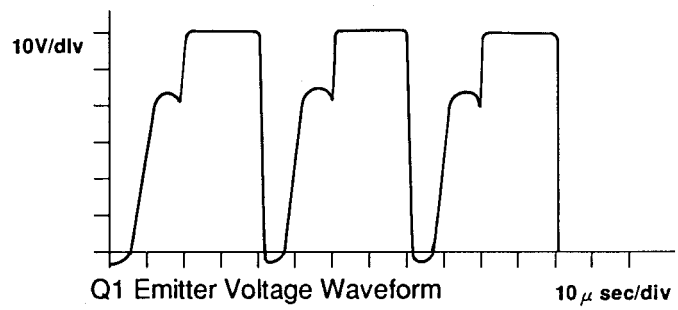
10V/dlv
Q1 Emitter Voltage Waveform
10 μ sec/div

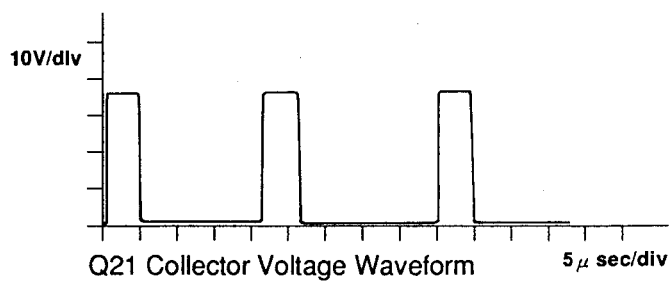
10V/dlv
Q21 Collector Voltage Waveform
5 μ sec/div

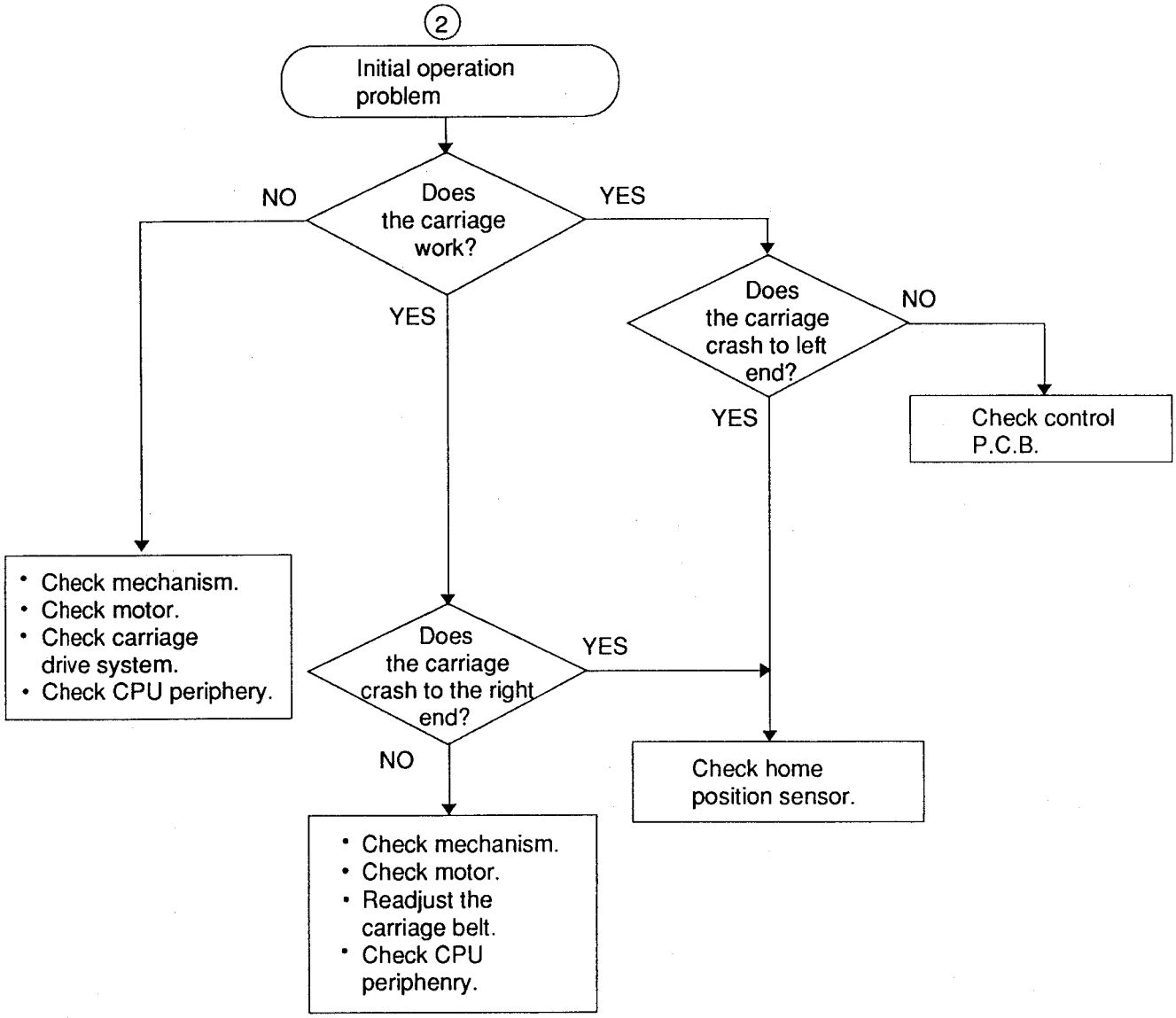
②
Initial operation problem
Does the carriage work?
NO
YES
Does the carriage crash to left end?
NO
YES
Check control P.C.B.
• Check mechanism.
• Check motor.
• Check carriage drive system.
• Check CPU periphery.
Does the carriage crash to the right end?
YES
NO
Check home position sensor.
• Check mechanism.
• Check motor.
• Readjust the carriage belt.
• Check CPU periphenry.

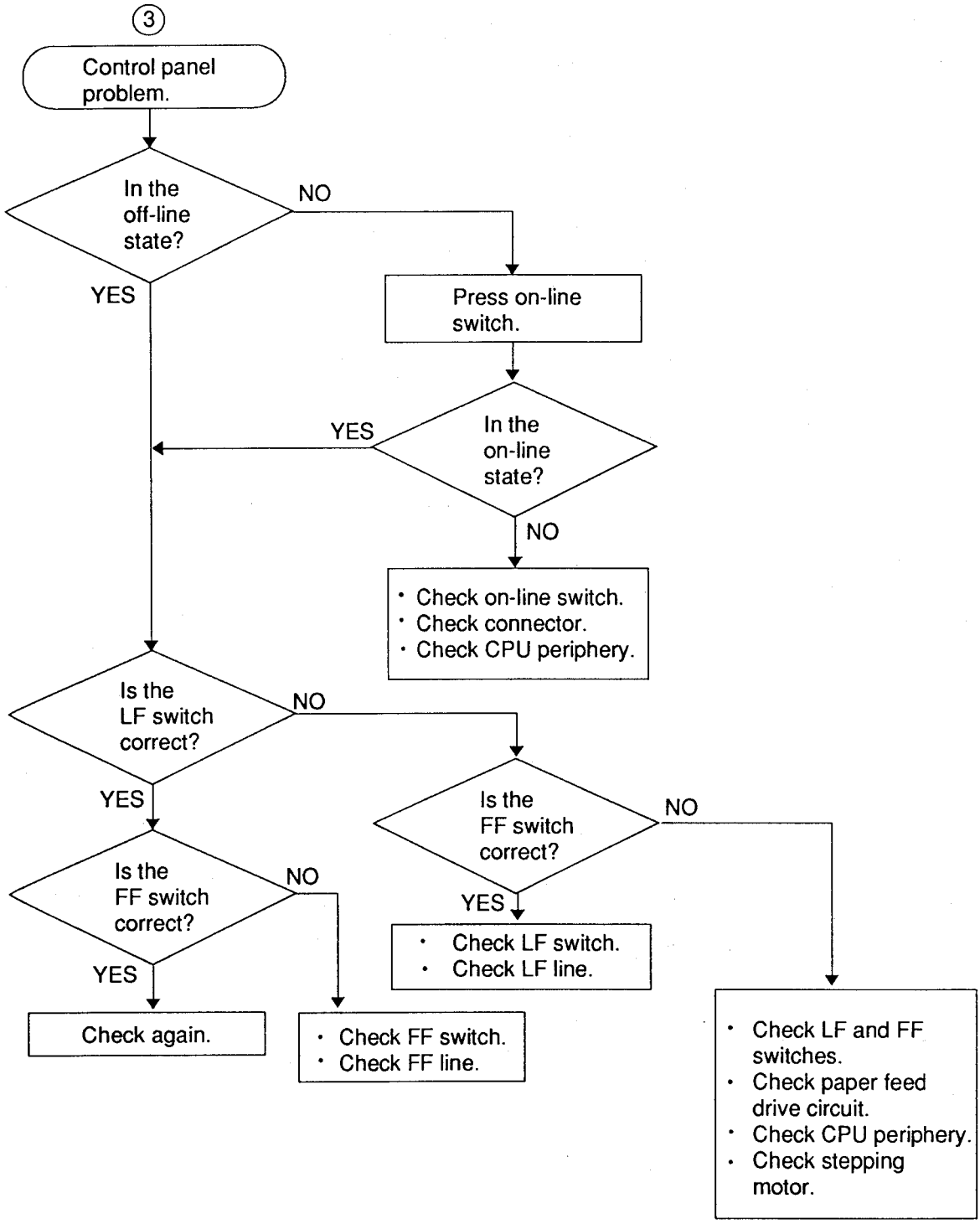
③
Control panel problem.
In the off-line state?
NO
YES
Press on-line switch.
In the on-line state?
YES
NO
• Check on-line switch.
• Check connector.
• Check CPU periphery.
Is the LF switch correct?
NO
YES
Is the FF switch correct?
NO
YES
Check again.
• Check FF switch.
• Check FF line.
Is the FF switch correct?
NO
YES
• Check LF switch.
• Check LF line.
• Check LF and FF switches.
• Check paper feed drive circuit.
• Check CPU periphery.
• Check stepping motor.

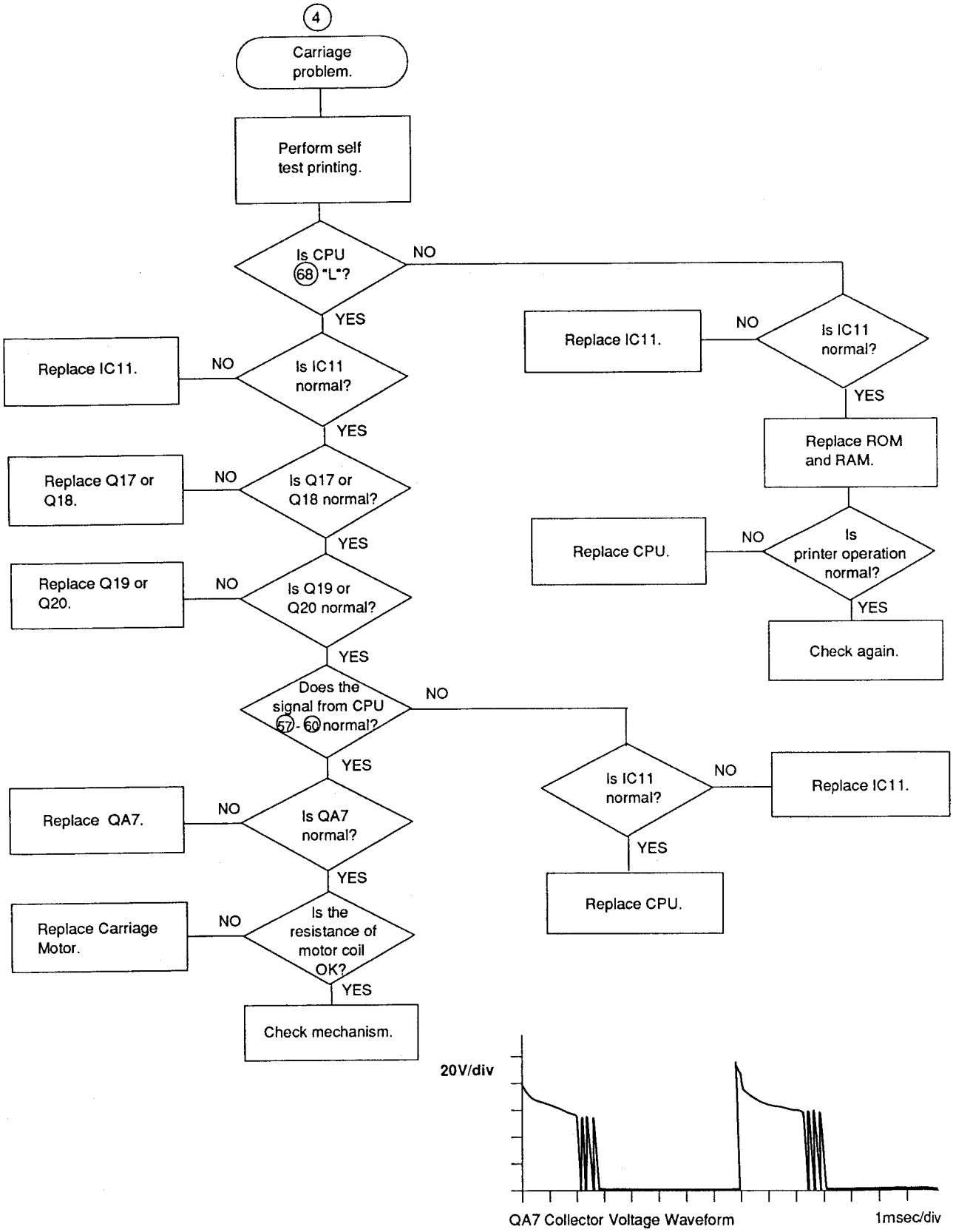
4
Carriage problem.
Perform self test printing.
Is CPU (68) "L"?
NO
YES
Replace IC11.
NO
Is IC11 normal?
YES
Replace Q17 or Q18.
NO
Is Q17 or Q18 normal?
YES
Replace Q19 or Q20.
NO
Is Q19 or Q20 normal?
YES
Does the signal from CPU (57)-(60) normal?
NO
YES
Replace QA7.
NO
Is QA7 normal?
YES
Replace Carriage Motor.
NO
Is the resistance of motor coil OK?
YES
Check mechanism.
Replace IC11.
NO
Is IC11 normal?
YES
Replace ROM and RAM.
Replace CPU.
NO
Is printer operation normal?
YES
Check again.
Is IC11 normal?
NO
Replace IC11.
YES
Replace CPU.
20V/div
QA7 Collector Voltage Waveform
1msec/div

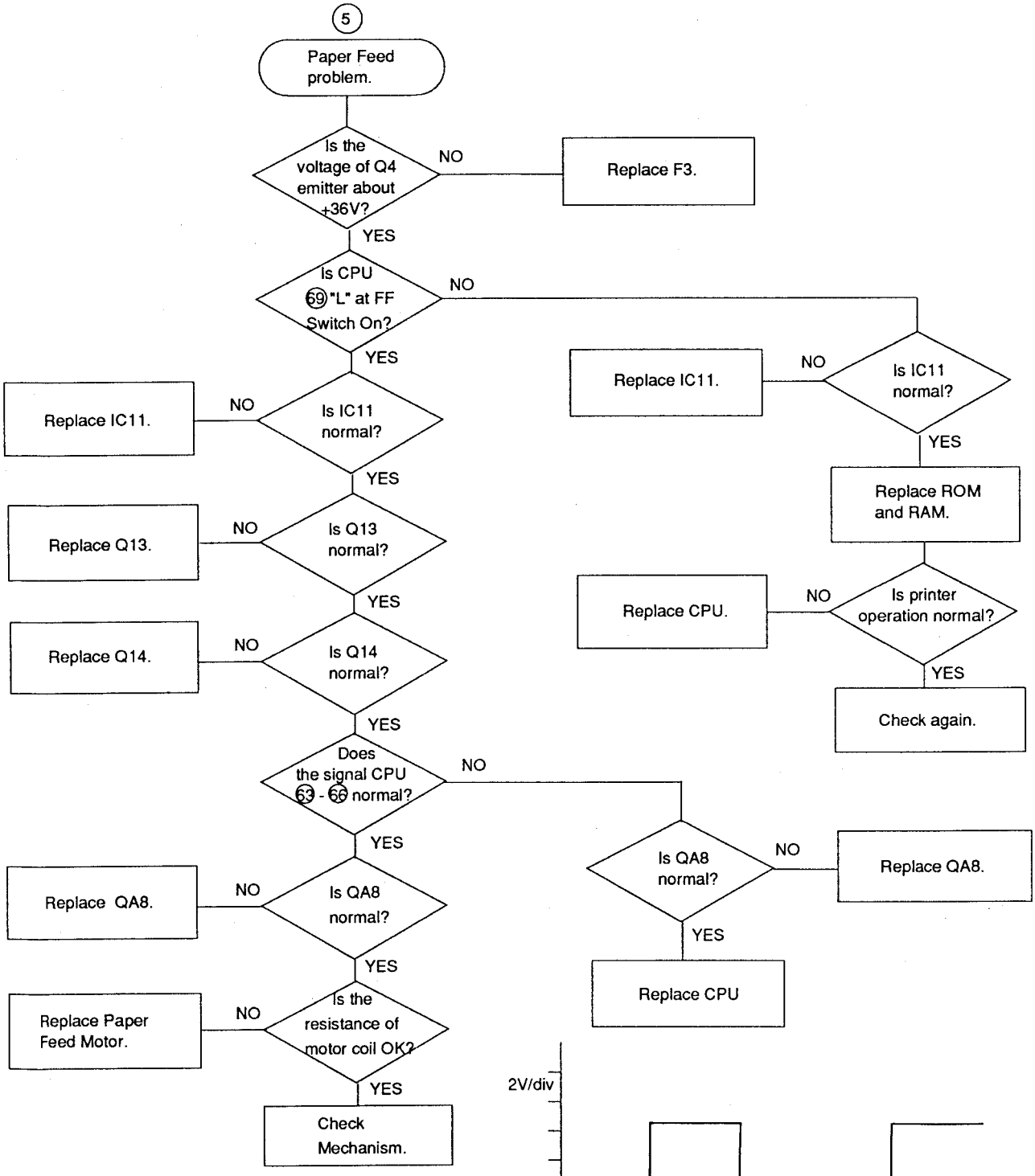


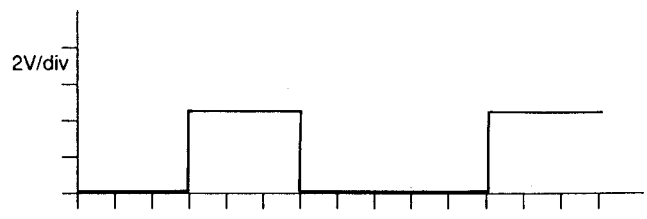


Phase Signal Voltage Waveform

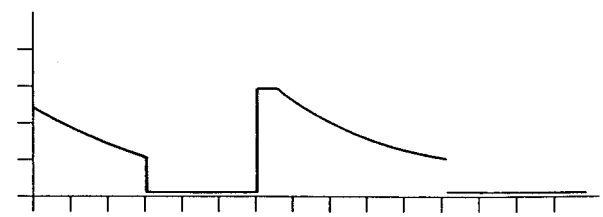

QA8 Collector Voltage Waveform

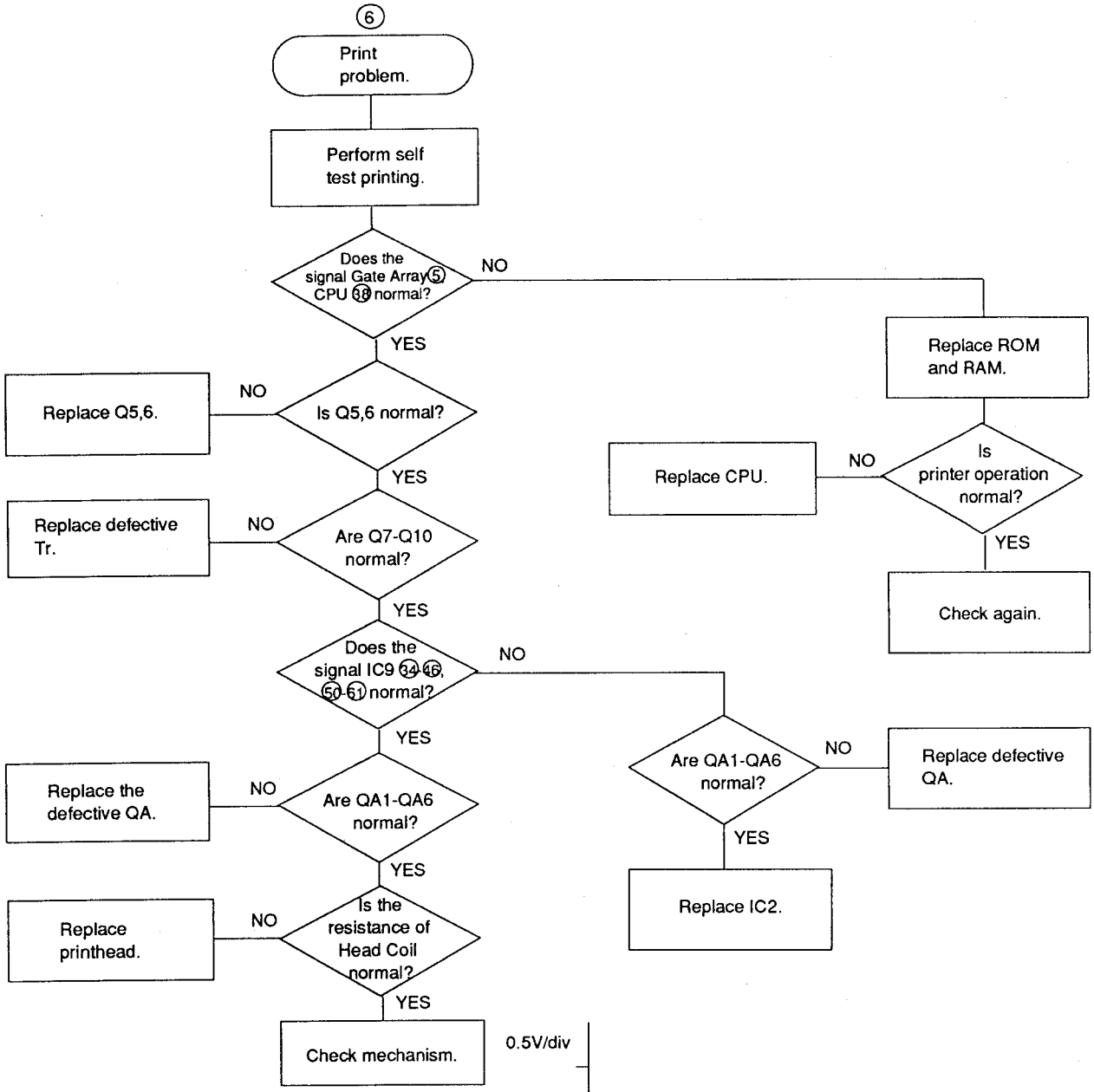
⑥
Print problem.
Perform self test printing.
Does the signal Gate Array ⑤, CPU ⑱ normal?
NO
YES
Replace ROM and RAM.
Is printer operation normal?
NO
Replace CPU.
YES
Check again.
Is Q5,6 normal?
NO
Replace Q5,6.
YES
Are Q7-Q10 normal?
NO
Replace defective Tr.
YES
Does the signal IC9 ㉞-㊻, ㊿-㊶ normal?
NO
YES
Are QA1-QA6 normal?
NO
Replace defective QA.
YES
Replace IC2.
Are QA1-QA6 normal?
NO
Replace the defective QA.
YES
Is the resistance of Head Coil normal?
NO
Replace printhead.
YES
Check mechanism.

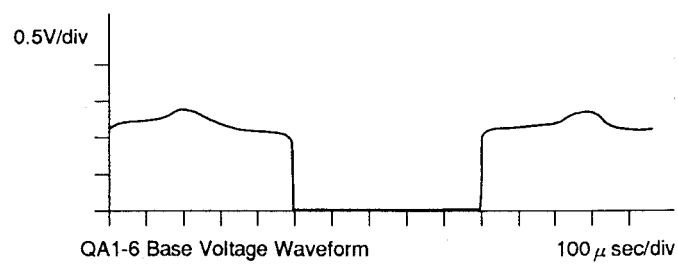
0.5V/div
QA1-6 Base Voltage Waveform
100 μ sec/div

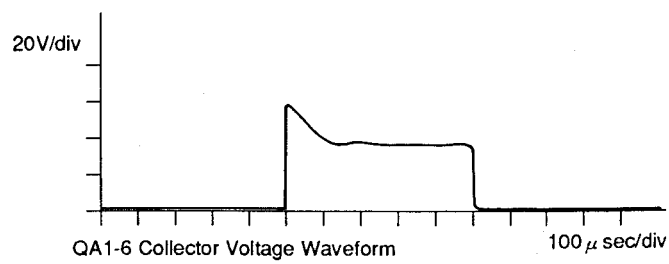
20V/div
QA1-6 Collector Voltage Waveform
100 μ sec/div

## 8.6 Schematic Diagram

[ Main Board ]

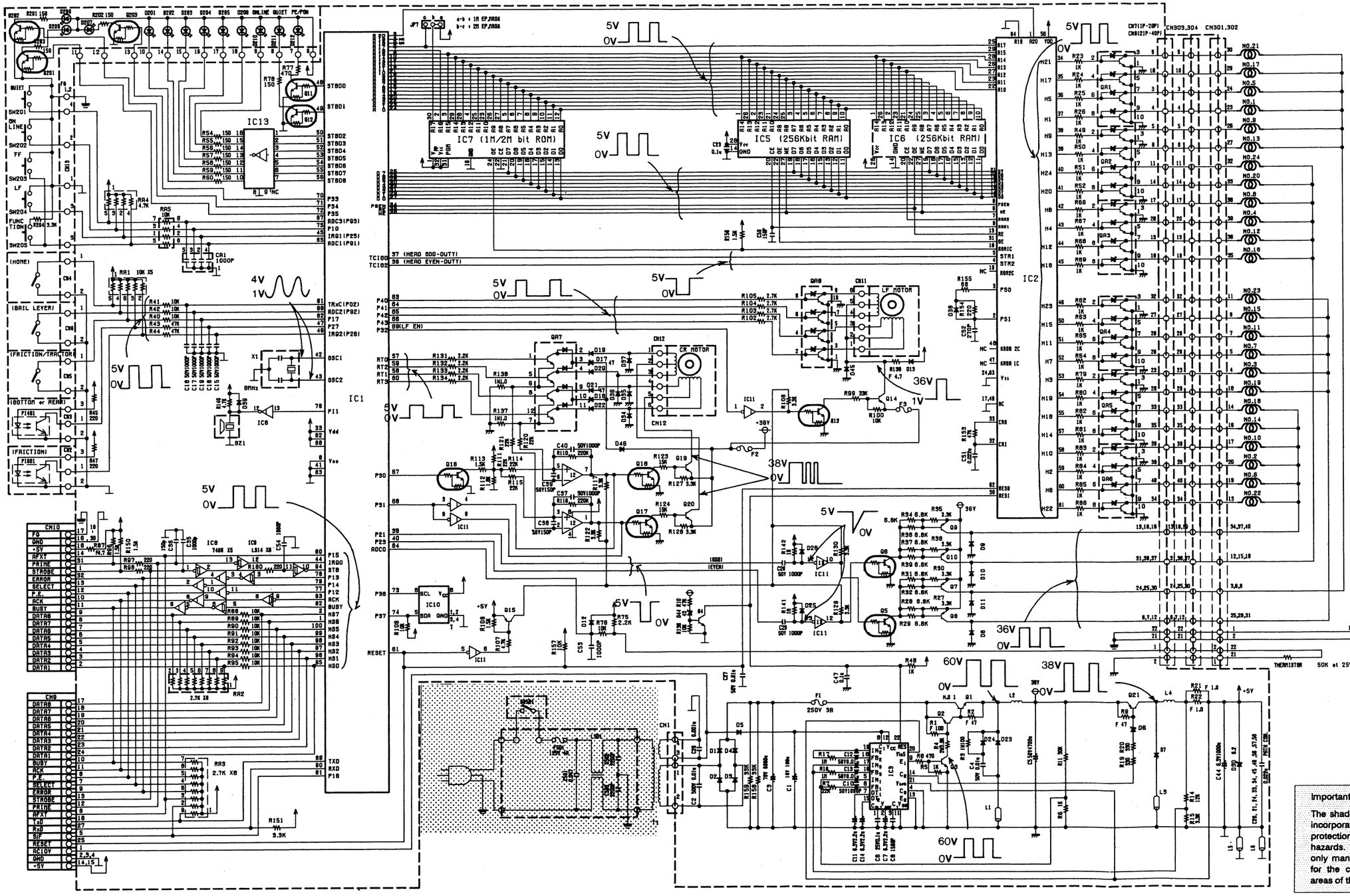

## 9. Parts List and Lubrication

Notes: 1. Important safety notice.
Components identified by ⚠ mark have special characteristics important for safety.
When replacing any of these components, use only manufacture's specified parts.
2. The S mark is for service standard parts and may differ from production parts.

### 9.1 Cabinet

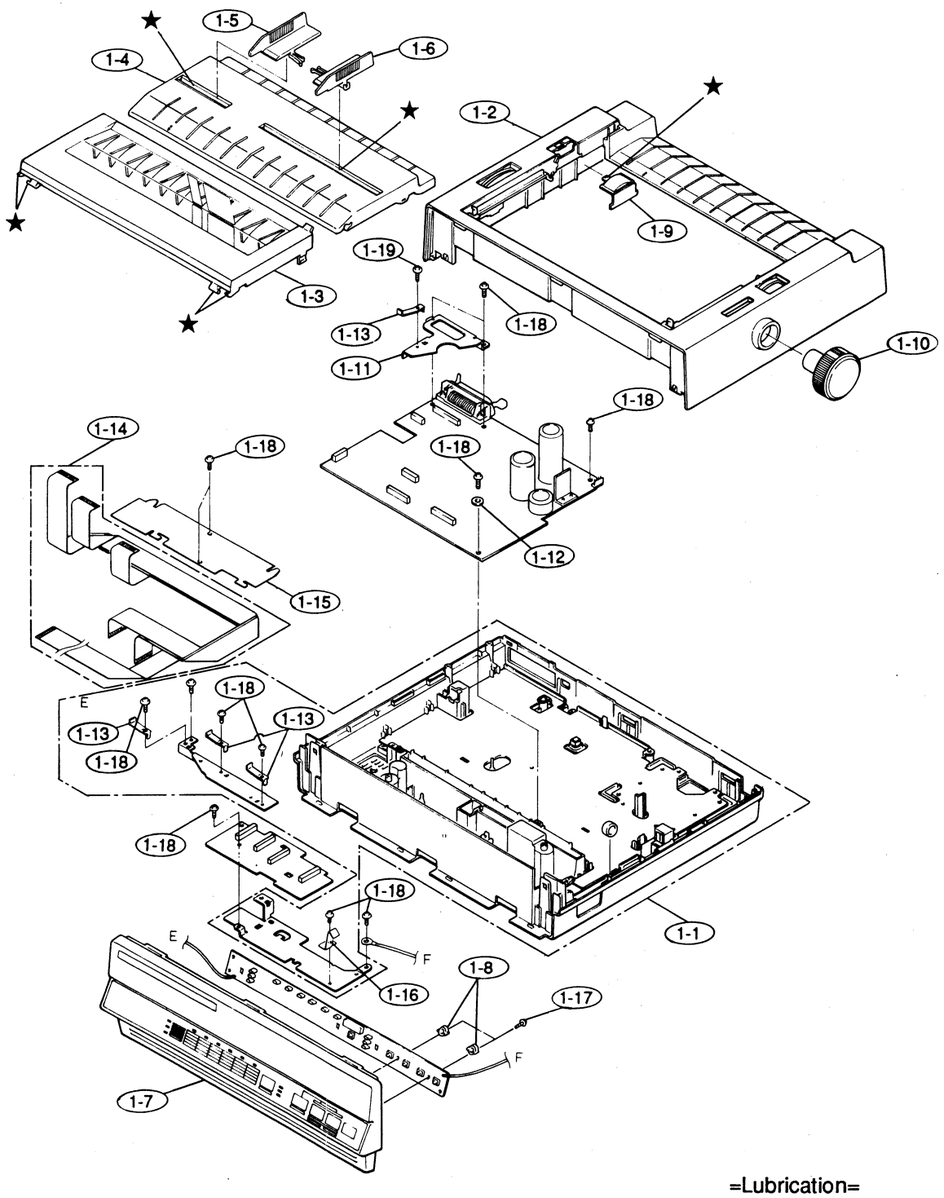


=Lubrication=
★ PJOL-PG671

(Cabinet) [ ] : COUNTRY CODE

| Ref.No. | Parts No. | Parts Name and Description | Per Set | Remarks |
|---|---|---|---|---|
| 1-1 | PJYMP1123U | Lower Cabinet Assembly | 1 | |
| 1-1 | PJYMP1123F | Lower Cabinet Assembly [F] [I] [O] [V] | 1 | |
| 1-1 | PJYMP1123SP | Lower Cabinet Assembly [SP] | 1 | |
| 1-2 | PJYFP1123U | Upper Cabinet Assembly | 1 | |
| 1-3 | PJYK2P1123U | Smoked Plastic Cover | 1 | |
| 1-3 | PJYK2P1123F | Smoked Plastic Cover [F] | 1 | |
| 1-3 | PJYK2P1123I | Smoked Plastic Cover [I] | 1 | |
| 1-3 | PJYK2P1123O | Smoked Plastic Cover [O] | 1 | |
| 1-3 | PJYK2P1123V | Smoked Plastic Cover [V] | 1 | |
| 1-3 | PJYK2P1123SP | Smoked Plastic Cover [SP] | 1 | |
| 1-4 | PJKK94Z | Top Cover | 1 | |
| 1-5 | PJUG106Z | Paper Guide (L) | 1 | |
| 1-6 | PJUG105Z | Paper Guide (R) | 1 | |
| 1-7 | PJYK1P1123U | Front Panel Assembly | 1 | |
| 1-8 | PJHR9365Z | Sheet Switch Spacer | 2 | |
| 1-9 | PJKE80Z-3 | Gear Cover | 1 | |
| 1-10 | PJBN25Z-3 | Platen Knob | 1 | |
| 1-11 | PJMC137Z | Shield Plate | 1 | |
| 1-12 | PJNW321Z | Washer | 1 | |
| 1-13 | PJUS3Z | GND Spring | 1 | |
| 1-14 | PJWWP1123U | Flat Cable Assembly | 1 | |
| 1-15 | PJMC138Z | Shield Sheet | 1 | |
| 1-16 | PJUS101Z | GND Spring | 1 | |
| 1-17 | XTW3+14F | Screw 3x14 mm | 2 | |
| 1-18 | XTW3+8L | Screw 3x8 mm | 14 | |
| 1-19 | XTW3+6L | Screw 3x6 mm | 1 | |

| COUNTRY CODE | COUNTRY | COUNTRY CODE | COUNTRY |
|---|---|---|---|
| [F] | FRANCE | [SP] | SPAIN |
| [I] | ITALY | [V] | BELGIUM |
| [O] | HOLLAND | | |

## 9.2 Power Supply

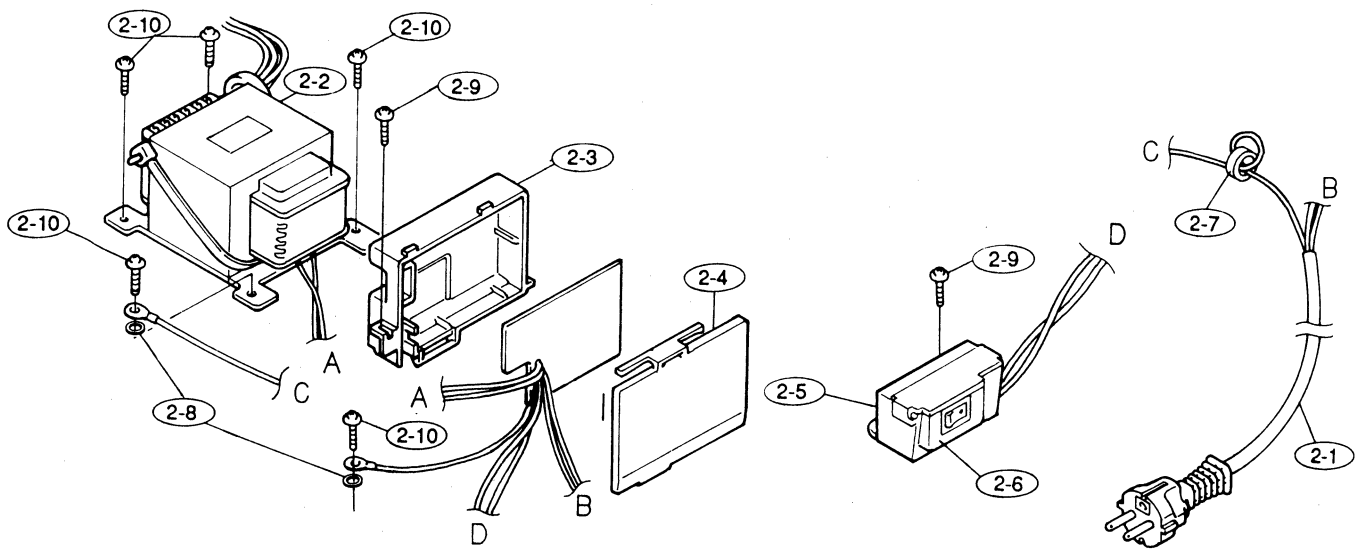


[ ] : COUNTRY CODE

| Ref.No. | Parts No. | Parts Name and Description | Per Set | Remarks |
|---|---|---|---|---|
| 2-1 | PJWAXP1595U | AC Cord Assembly | 1 | ⚠ |
| 2-1 | PJWAXP1595B | AC Cord Assembly [F] [I] [O] [V] [SP] | 1 | ⚠ |
| 2-2 | PJWTP1123U | Power Transformer | 1 | ⚠ |
| 2-2 | PJWTP1123G | Power Transformer [F] [I] [O] [V] [SP] | 1 | ⚠ |
| 2-3 | PJMX48Z | Fuse Enclosure Base | 1 | |
| 2-4 | PJMX49Z | Fuse Enclosure Cover | 1 | |
| 2-5 | PJMX46Z-3 | Switch Enclosure Base | 1 | |
| 2-6 | PJMX47Z-3 | Switch Enclosure Cover | 1 | |
| 2-7 | PJJN9Z | ES Core | 1 | |
| 2-8 | XWC4B | Washer | 2 | |
| 2-9 | XTW3+14F | Screw 3x14mm | 1 | |
| 2-10 | XTW4+8L | Screw 4x8mm | 6 | |
| SW501 | EST2011B | Power Switch | 1 | ⚠ |
| F501 | XBA2C16TBO | Fuse 1.6A, 250V | 1 | ⚠ |
| C501 | ECQE2A473HW | 125V 2200P Ceramic | 1 | ⚠ |
| C502,503 | ECKDKC222MF2 | Power Switch | 2 | ⚠ |
| L501 | PJLQS102 | Coil | 1 | ⚠ |

## 9.3 Tractor and Carriage

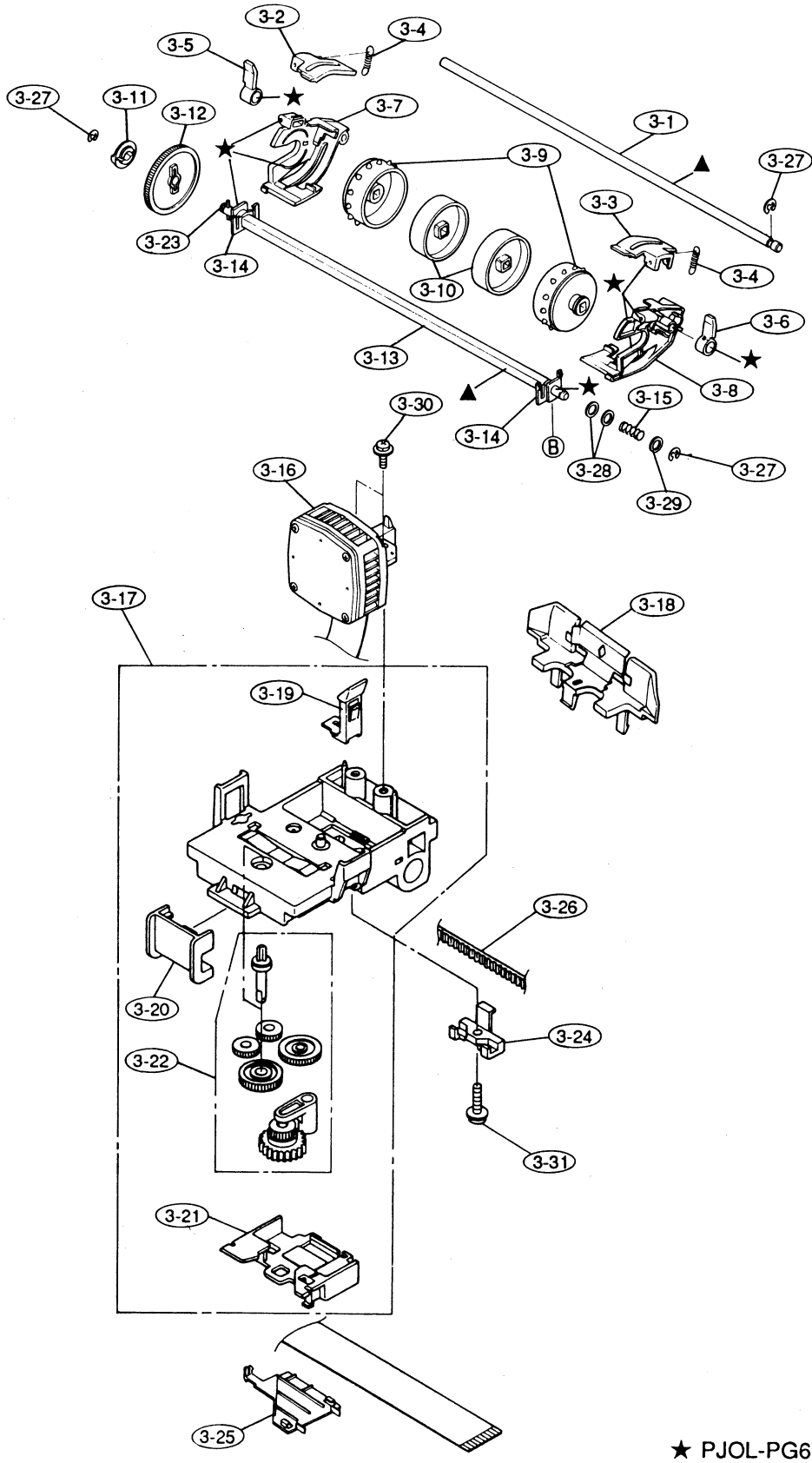


★ PJOL-PG671
▲ PJOL-K1879

(Tractor and Carriage)

[ ] : COUNTRY CODE

| Ref.No. | Parts No. | Parts Name and Description | Per Set | Remarks |
|---|---|---|---|---|
| 3-1 | PJDF340Z | Tractor Guide Shaft | 1 | |
| 3-2 | PJDT87Z | Tractor Cover (L) | 1 | |
| 3-3 | PJDT88Z | Tractor Cover (R) | 1 | |
| 3-4 | PJDS3101Z | Spring | 2 | |
| 3-5 | PJDT89Z | Lock Lever (L) | 1 | |
| 3-6 | PJDT90Z | Lock Lever (R) | 1 | |
| 3-7 | PJDT111Z | Tractor Base (L) | 1 | |
| 3-8 | PJDT112Z | Tractor Base (R) | 1 | |
| 3-9 | PJDT91Z | Pin Wheel | 2 | |
| 3-10 | PJDT92Z | Paper Support | 2 | |
| 3-11 | PJDG5096Z | Clutch Gear | 1 | |
| 3-12 | PJDG5095Z | Tractor Gear | 1 | |
| 3-13 | PJDF339Z | Tractor Drive Shaft | 1 | |
| 3-14 | PJDJ06079RZ | Tractor Bushing | 2 | |
| 3-15 | PJDS5126Z | Spring | 1 | |
| 3-16 | PJWHP1123U | Head Assembly | 1 | |
| 3-16 | PJWHP1123F | Head Assembly [F] | 1 | |
| 3-16 | PJWHP1123SP | Head Assembly [SP] | 1 | |
| 3-17 | PJZCP1123U | Carriage Assembly | 1 | |
| 3-18 | PJZU3P1123M | Ribbon Mask Assembly | 1 | |
| 3-19 | PJME15Z | Cassette Lever | 1 | |
| 3-20 | PJHR9164Z | Rear Side Guide | 1 | |
| 3-21 | PJME101Z | Ribbon Feed Gear Cover | 1 | |
| 3-22 | PJZG1P1180M | Gear Kit | 1 | |
| 3-23 | XPL2A10WW | Pin | 1 | |
| 3-24 | PJME103Z | Timing Belt Clamp | 1 | |
| 3-25 | PJME118Z | Cable Clamp | 1 | |
| 3-26 | PJDV24Z | Timing Belt | 1 | |
| 3-27 | XUC4FY | E-ring | 3 | |
| 3-28 | XWE6 | Washer | 2 | |
| 3-29 | XWG6E10 | Plastic Washer | 1 | |
| 3-30 | XYN3+F8 | Screw 3x8 mm | 2 | |
| 3-31 | XTW3+10F | Screw 3x10 mm | 1 | |

## 9.4 Chassis

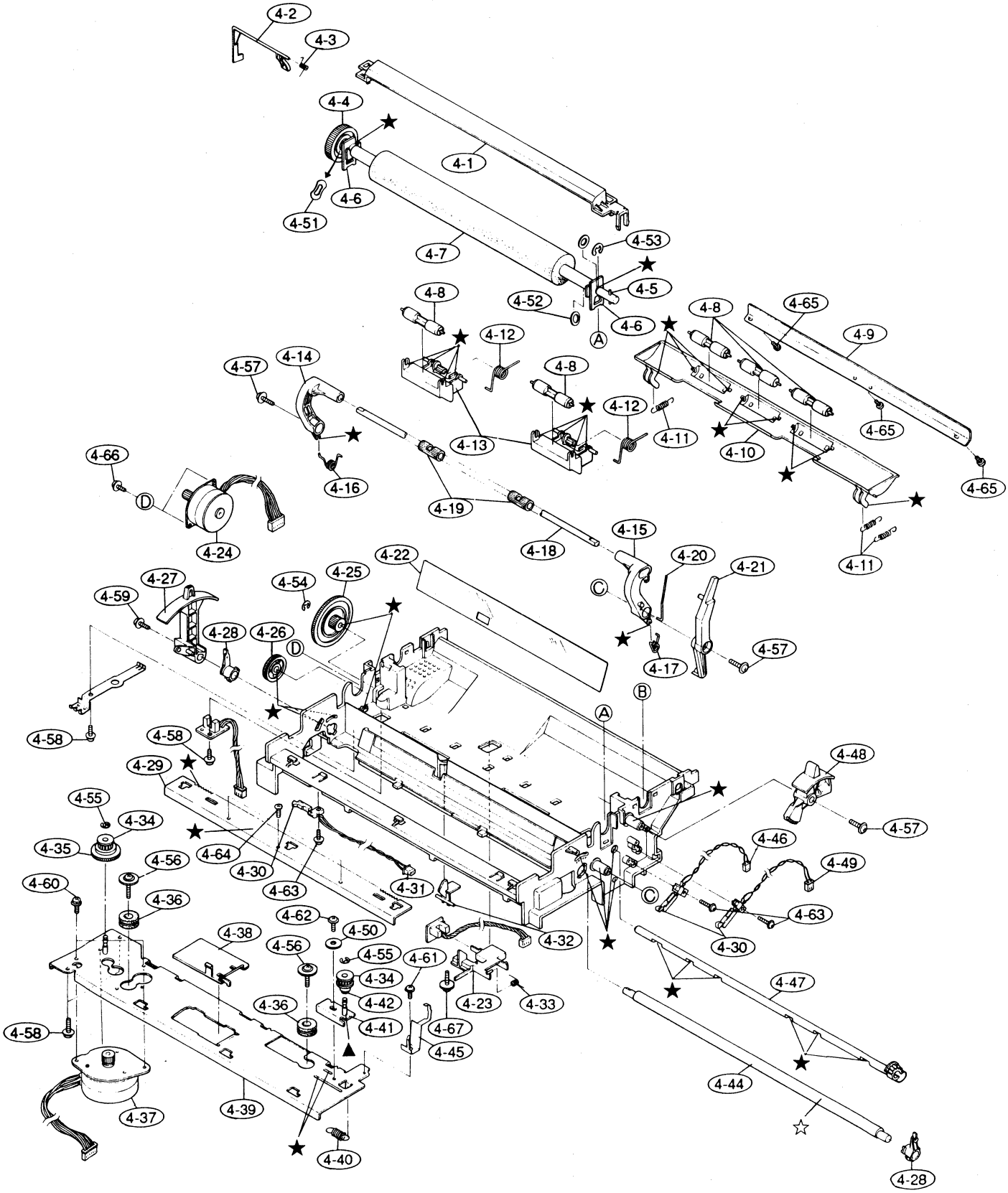


★ PJOL-PG671
▲ PJOL-K1879
☆ PJOL-G948P

(Chassis)

| Ref.No. | Parts No. | Parts Name and Description | Per Set | Remarks |
|---|---|---|---|---|
| 4-1 | PJUG74Z | Paper Separator | 1 | |
| 4-2 | PJHR9167Z | Paper End Sensor Contact Lever | 1 | |
| 4-3 | PJDS7026Z | Spring | 1 | |
| 4-4 | PJDG5091Y | Platen Gear | 1 | |
| 4-5 | XPL2A14WFP | Pin | 2 | |
| 4-6 | PJDJ08309RZ | Platen Bushing | 2 | |
| 4-7 | PJZR1P1180M | Platen Assembly | 1 | |
| 4-8 | PJDR71Z | Friction Roller | 5 | |
| 4-9 | PJUL111Z | Guide Support | 1 | |
| 4-10 | PJUG104Z | Paper Guide | 1 | |
| 4-11 | PJDS5212Z | Spring | 3 | |
| 4-12 | PJDS7034Z | Spring | 2 | |
| 4-13 | PJUR14Y | Roller Holder | 2 | |
| 4-14 | PJME104Z | Bail Arm (L) | 1 | |
| 4-15 | PJME105Z | Bail Arm (R) | 1 | |
| 4-16 | PJDS7022Y | Bail Spring (L) | 1 | |
| 4-17 | PJDS7023Y | Bail Spring (R) | 1 | |
| 4-18 | PJDF9123Z | Bail Shaft | 1 | |
| 4-19 | PJZR2P1191M | Bail Roller Kit | 2 | |
| 4-20 | PJDS7027Z | Bail Lever Spring | 1 | |
| 4-21 | PJUB73Z-3 | Bail Lever | 1 | |
| 4-22 | PJZU1P1180M | Back Tension Sheet Assembly | 1 | |
| 4-23 | PJHR9165Y | Paper End Sensor Contact Lever | 1 | |
| 4-24 | PJJQ141Z | Line Feed Motor | 1 | |
| 4-25 | PJDG5228Z | Middle Gear | 1 | |
| 4-26 | PJZG2P1180M | Scissors Gear Assembly | 1 | |
| 4-27 | PJUB72Z-3 | Head Gap Lever | 1 | |
| 4-28 | PJDG5218Z | Eccentric Cam | 2 | |
| 4-29 | PJUL83Y | Carriage Guide Plate | 1 | |
| 4-30 | PJSH1A28Z | Leaf Switch | 3 | |
| 4-31 | PJJS515Z | Connector with Cable (Home Switch) | 1 | |
| 4-32 | PJHR9166Z | Paper End Contact Lever | 1 | |
| 4-33 | PJDS7025Z | Spring | 1 | |
| 4-34 | PJDG0906Z | Pulley Frange | 2 | |
| 4-35 | PJDG9030Z | Drive Gear | 1 | |
| 4-36 | PJHG328Y | Mount Rubber | 2 | |
| 4-37 | PJJQ92Z | Carriage Motor | 1 | |
| 4-38 | PJUV71Z | Head Cable Cover | 1 | |
| 4-39 | PJZKP1123U | Carriage Motor Base Assembly | 1 | |
| 4-40 | PJDS5055Z | Bracket Spring | 1 | |
| 4-41 | PJZHP1180M | Idle Pulley Bracket Assembly | 1 | |
| 4-42 | PJDD4134Z | Idle Pulley | 1 | |
| 4-43 | PJMC90Z | Motor GND | 1 | |
| 4-44 | PJDF556Z | Carriage Shaft | 1 | |
| 4-45 | PJUS97Z | Shaft GND | 1 | |
| 4-46 | PJJS491Z | Connector with Cable (Bail Switch) | 1 | |
| 4-47 | PJDF9125Z | Friction Cam Shaft | 1 | |
| 4-48 | PJUB74Z-3 | Paper Feed Selector | 1 | |
| 4-49 | PJJS506Z | Connector with Cable (Friction/Tractor Switch) | 1 | |
| 4-50 | XWG3F13 | Washer | 1 | |
| 4-51 | PJHE6019Z | Washer | 1 | |
| 4-52 | XWG8A19WW | Washer | 1 | |
| 4-53 | XUC7FY | E-ring | 1 | |
| 4-54 | XUC4FY | E-ring | 1 | |
| 4-55 | XUC3FY | E-ring | 2 | |
| 4-56 | PJYC3+MC16 | Screw 3x16mm | 2 | |
| 4-57 | XTW3+10F | Screw 3x10mm | 3 | |
| 4-58 | XTW3+8F | Screw 3x8mm | 4 | |
| 4-59 | XYN3+F8 | Screw 3x8mm | 1 | |
| 4-60 | XYN3+F6 | Screw 3x6mm | 2 | |
| 4-61 | XTW3+6L | Screw 3x6mm | 1 | |
| 4-62 | XTW3+U6L | Screw 3x6mm | 1 | |
| 4-63 | XTW26+10F | Screw 2.6x10mm | 3 | |
| 4-64 | XTB3+10J | Screw 2.6x8mm | 3 | |
| 4-65 | XTB3+8J | Screw 3x10mm | 3 | |
| 4-66 | XYN26+F8 | Screw 2.6x8mm | 2 | |
| 4-67 | PJME5065Z | Screw | 1 | |

## 9.5 Main Board

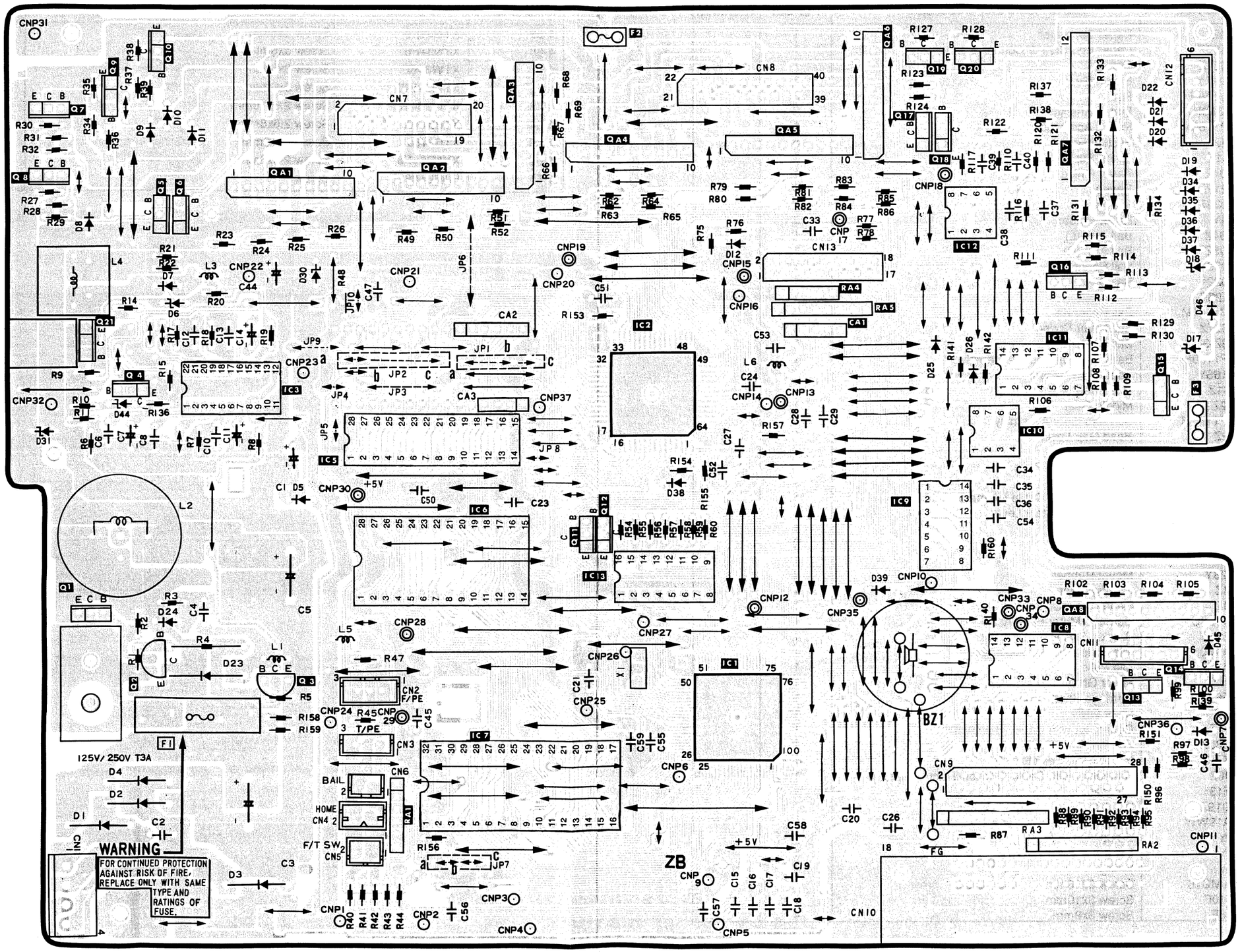


(Parts Side View)

| Ref.No. | Parts No. | Parts Name and Description | | | Per Set | Remarks |
|---|---|---|---|---|---|---|
| **Integrated Circuits, Transistor and Diodes** | | | | | | |
| IC1 | MN18806 | IC | | | 1 | |
| IC2 | MN51005Q | IC | | | 1 | |
| IC3 | AN8081K | IC | | | 1 | |
| IC5 | PJVITC51832S | IC | | | 1 | |
| IC7 | PJWIP1123M | IC (ROM) | | | 1 | |
| IC8 | PJVIHD7406P | IC | | | 1 | |
| IC9 | PJVIM74LS14P | IC | | | 1 | |
| IC10 | PJVIM24C01P | IC | | | 1 | |
| IC11 | PJVIM74HC05P | IC | | | 1 | |
| IC12 | PJVILM393P | IC | | | 1 | |
| IC13 | PJVIMC1413P | IC | | | 1 | |
| D1-4 | PJVDRL253 | Diode | | | 4 | |
| D5,8-11,34-37 | PJVD1N4003N | Diode | | | 9 | |
| D6 | MA4100 | Diode | | | 1 | |
| D7,38 | PJVDEK09W | Diode | | | 2 | |
| D12,13 | 1SS178 | Diode | | | 2 | |
| D17,18 | PJVD05AZ47 | Diode | | | 2 | |
| D19-22,24 | PJVD1N4003N | Diode | | | 5 | |
| D23 | PJVDERC91 | Diode | | | 1 | |
| D25,26,39 | 1SS178 | Diode | | | 3 | |
| D30 | PJVD05AZ6.2X | Diode | | | 1 | |
| D44 | PJVD05AZ43 | Diode | | | 1 | |
| D45,46 | PJVD1N4003N | Diode | | | 2 | |
| Q1 | 2SD2151P | Transistor | | | 1 | |
| Q2 | 2SA1533 | Transistor | | | 1 | |
| Q3 | 2SC3939 | Transistor | | | 1 | |
| Q4 | 2SC3311A | Transistor | | | 1 | |
| Q5,6,11 | UN421 | Transistor | | | 3 | |
| Q7-10 | 2SB1504 | Transistor | | | 4 | |
| Q12,13,16-18 | UN421 | Transistor | | | 4 | |
| Q14,19,20 | 2SB1333 | Transistor | | | 3 | |
| Q15 | 2SA1309 | Transistor | | | 1 | |
| Q21 | 2SB1393 | Transistor | | | 1 | |
| **Resistors** | | | | | | |
| R1 | ERD16FJ101 | 100 | 1/6W | Carbon | 1 | S |
| R2,9 | ERQS2BJ470 | 47 | 1/4W | Metal | 2 | |
| R3 | ERG1SJ101 | 100 | 1W | Metal | 1 | |
| R4 | ERG2SJ392 | 3.9K | 2W | Metal | 1 | |
| R5 | ERD16FJ102 | 1K | 1/6W | Carbon | 1 | S |
| R6 | EROS2TKG1001 | 1K | 1/4W | Metal | 1 | |
| R7 | ERD16FJ223 | 22K | 1/6W | Carbon | 1 | S |
| R8 | ERD16FJ471 | 470 | 1/6W | Carbon | 1 | S |
| R10 | ERD16FJ473 | 47K | 1/6W | Carbon | 1 | S |
| R11 | EROS2TKG3002 | 30K | 1/4W | Metal | 1 | S |
| R14 | ERD16FJ123 | 12K | 1/6W | Carbon | 1 | S |
| R15,27,30 | ERD16FJ332 | 3.3K | 1/6W | Carbon | 3 | S |

| Ref.No. | Parts No. | Parts Name and Description | | | Per Set | Remarks |
|---|---|---|---|---|---|---|
| R17,18 | ERD16FJ105 | 1M | 1/6W | Carbon | 2 | S |
| R19,20 | ERD16FJ331 | 330 | 1/6W | Carbon | 2 | S |
| R21,22 | ERQS2BJ1ROT | 1 | 1/4W | Metal | 2 | S |
| R23-26 | ERD16FJ102 | 1K | 1/6W | Carbon | 4 | S |
| R28,29,31,32 | ERD16FJ682 | 6.8K | 1/6W | Carbon | 4 | S |
| R34,36,37,39 | ERD16FJ682 | 6.8K | 1/6W | Carbon | 4 | S |
| R35,38 | ERD16FJ332 | 3.3K | 1/6W | Carbon | 2 | S |
| R40-42 | ERD16FJ103 | 10K | 1/6W | Carbon | 3 | S |
| R43,44 | ERD16FJ473 | 47K | 1/6W | Carbon | 2 | S |
| R45,47 | ERD16FJ221 | 220 | 1/6W | Carbon | 2 | S |
| R48,157 | ERD16FJ103 | 10K | 1/6W | Carbon | 2 | S |
| R49-52,62-69 | ERD16FJ102 | 1K | 1/6W | Carbon | 12 | S |
| R54-60,78 | ERD16FJ151 | 150 | 1/6W | Carbon | 8 | S |
| R75 | ERD16FJ222 | 2.2K | 1/6W | Carbon | 1 | S |
| R76,100,106 | ERD16FJ103 | 10K | 1/6W | Carbon | 3 | S |
| R77 | ERD16FJ471 | 470 | 1/6W | Carbon | 1 | S |
| R79-86 | ERD16FJ102 | 1K | 1/6W | Carbon | 8 | S |
| R87 | ERQS2BJ4R7 | 4.7 | 1/4W | Metal | 1 | |
| R88-95 | ERD16FJ103 | 10K | 1/6W | Carbon | 8 | S |
| R96 | ERD16FJ152 | 1.5K | 1/6W | Carbon | 1 | S |
| R97,98,154 | ERD16FJ221 | 220 | 1/6W | Carbon | 3 | S |
| R99,158,159 | ERD16FJ333 | 33K | 1.6W | Carbon | 3 | S |
| R102-105 | ERD16FJ272 | 2.7K | 1/6W | Carbon | 4 | S |
| R107 | ERD16FJ472 | 4.7K | 1/6W | Carbon | 1 | S |
| R108,117 | ERD16FJ332 | 3.3K | 1/6W | Carbon | 2 | S |
| R109,113 | ERD16FJ152 | 1.5K | 1/6W | Carbon | 2 | S |
| R110,116 | ERD16FJ224 | 220K | 1/6W | Carbon | 2 | S |
| R111,114,115 | ERD16FJ223 | 22K | 1/6W | Carbon | 3 | S |
| R112 | ERD16FJ182 | 1.8K | 1/6W | Carbon | 1 | S |
| R120,121 | ERD16FJ223 | 22K | 1/6W | Carbon | 2 | S |
| R122,127-130 | ERD16FJ332 | 3.3K | 1/6W | Carbon | 5 | S |
| R123,124 | ERD16FJ153 | 15K | 1/6W | Carbon | 2 | S |
| R131-134 | ERD16FJ222 | 2.2K | 1/6W | Carbon | 4 | S |
| R136 | ERD16FJ103 | 10K | 1/6W | Carbon | 1 | S |
| R137,138 | ERX1SJ1RO | 1 | 1W | Metal | 2 | |
| R139 | ERQS2BJ4R7T | 4.7 | 1/4W | Metal | 1 | S |
| R140 | ERD16FJ472 | 4.7K | 1/6W | Carbon | 1 | S |
| R141,142 | ERD16FJ105 | 1M | 1/6W | Carbon | 2 | S |
| R150,156 | ERD16FJ152 | 1.5K | 1/6W | Carbon | 2 | S |
| R151 | ERD16FJ332 | 3.3K | 1/6W | Carbon | 2 | S |
| R153 | ERD16FJ473 | 47K | 1/6W | Carbon | 1 | S |
| R155 | ERD16FJ680 | 68 | 1/6W | Carbon | 1 | S |
| R160 | ERD16FJ221 | 220 | 1/6W | Carbon | 1 | |

| Ref.No. | Parts No. | Parts Name and Description | | | Per Set | Remarks |
|---|---|---|---|---|---|---|
| **Capacitors** | | | | | | |
| C1 | ECEA1CU101B | 16V | 100 | Electrolytic | 1 | |
| C2 | ECKR2H103ZU | 500V | 0.01 | Ceramic | 1 | |
| C3 | ECOS70P682C | 70V | 6800 | Metal | 1 | |
| C4,12,13 | ECKD1H103ZF | 50V | 0.01 | Semi-Conductor | 3 | S |
| C5 | ECET50S472 | 50V | 4700 | Electrolytic | 1 | |
| C6,23,47 | ECFD1E104ZF | 25V | 0.1 | Semi-Conductor | 3 | S |
| C7,11,14 | ECEA1HK2R2B | 50V | 2.2 | Electrolytic | 3 | |
| C8 | ECQM1H152JV3 | 50V | 1500P | Polyester | 1 | |
| C9 | ECEA0JU221 | 6.3V | 220 | Electrolytic | 1 | |
| C10,15-19,26 | ECKD1H102KB | 50V | 1000P | Ceramic | 6 | S |
| C27 | ECKD1H103ZF | 50V | 0.01 | Ceramic | 1 | S |
| C28,29,35 | ECKD1H102KB | 50V | 1000P | Ceramic | 3 | S |
| C36,38,39 | ECKD1H151KB | 50V | 150P | Ceramic | 3 | S |
| C37,40,53,54 | ECKD1H102KB | 50V | 1000P | Ceramic | 4 | S |
| C44 | ECEA0JU102B | 6.3V | 1000 | Esectrolytic | 1 | |
| C46,56-58 | ECFD1H223ZF | 50V | 0.022 | Semi-Conductor | 4 | S |
| C20,21,24 | ECFD1H223ZF | 50V | 0.022 | Semi-Conductor | 3 | S |
| C33,34,45,51 | ECFD1H223ZF | 50V | 0.022 | Semi-Conductor | 4 | S |
| C50 | ECCT1H151JC | 50V | 220P | Ceramic | 1 | S |
| C52 | ECCT1H271JC | 50V | 270P | Ciramic | 1 | S |
| **Component Combinations** | | | | | | |
| RA1 | EXBF6E103J | R-Array | | | 1 | |
| RA2,3 | EXBF9E272J | R-Array | | | 1 | |
| RA4 | EXBF5E472J | R-Array | | | 1 | |
| RA5 | EXBF8V103J | R-Array | | | 1 | |
| QA1-6,8 | PJVISTA401A | Transistor Array | | | 7 | |
| QA7 | PJVISMA4031 | Transistor Array | | | 1 | |
| CA1 | EXFP4102ZW | C-Array | | | 1 | |

| Ref.No. | Parts No. | Parts Name and Description | Per Set | Remarks |
|---|---|---|---|---|
| | | **Other Parts** | | |
| HS1 | PJMY66Z | Heat Sink for Q1 | 1 | |
| BZ1 | EFB-RD22C41 | Buzzer | 1 | |
| CN1 | PJJP81Z | Connector, Power Transformer | 1 | |
| CN2 | PJJP147Z | Connector, Rear / Bottom Paper End Sensor | 1 | |
| CN3 | PJJP158Z | Connector, CSF Paper End Sensor | 1 | |
| CN4 | PJJP157Z | Connector, Home Switch | 1 | |
| CN5 | PJJP37Z | Connector, Friction / Tractor Switch | 1 | |
| CN6 | PJJP168Z | Connector, Bail Switch | 1 | |
| CN7,8 | PJJS397Z | Connector, Printhead | 2 | |
| CN9 | PJJS460Z | Connector, Option | 1 | |
| CN10 | PJJS29W | Connector, Centronics | 1 | |
| CN11 | PJJP160Z | Connector, Paper Feed Motor | 1 | |
| CN12 | PJJP40Z | Connector, Carriage Motor | 1 | |
| CN13 | PJJS425Z | Connector, Control Panel | 1 | |
| F1 | XBA2C31TBO | Fuse 3.15A, 250V | 1 | ⚠ |
| F2,3 | XBAICPF50 | IC Protector | 2 | |
| L1,3,5,6 | PJLQ19Z | Coil | 4 | |
| L2 | PJLQ12Z | Coil | 1 | |
| L4 | PJLQ11Z | Coil | 1 | |
| PB1 | PJWP1P1123U | Main Board Complete | 1 | |
| X1 | PJVCST8MT | X'Tal | 1 | |

## 9.6 Control Panel

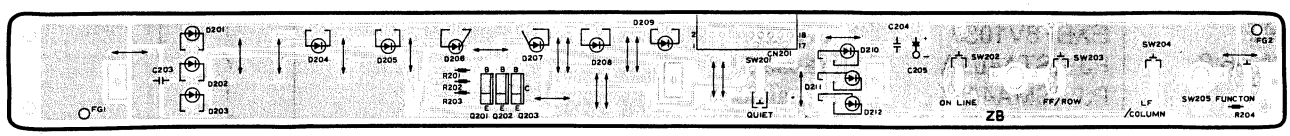


(Parts Side View)

| Ref.No. | Parts No. | Parts Name and Description | Per Set | Remarks |
|---|---|---|---|---|
| C203,204 | ECFD1H223ZF | 0.022 50V Semi-Conductor | 2 | S |
| CN201 | PJJS708Z | Connector | 1 | |
| D201-211 | PJVDTLG208 | Diode | 11 | |
| D212 | PJVDTLR208 | Diode | 1 | |
| R201-203 | ERD16FJ151 | 150V 1/6W Carbon | 3 | S |
| R204 | ERD16FJ332 | 3.3K 1/6w Carbon | 1 | S |
| Q201-203 | UN421 | Transistor | 3 | |
| SW201-205 | EVQ-QS205K | Switch | 5 | |
| PB2 | PJWP2P1123U | Control Board Complete | 1 | |

## 9.7 Sensor and Head Relay Terminal

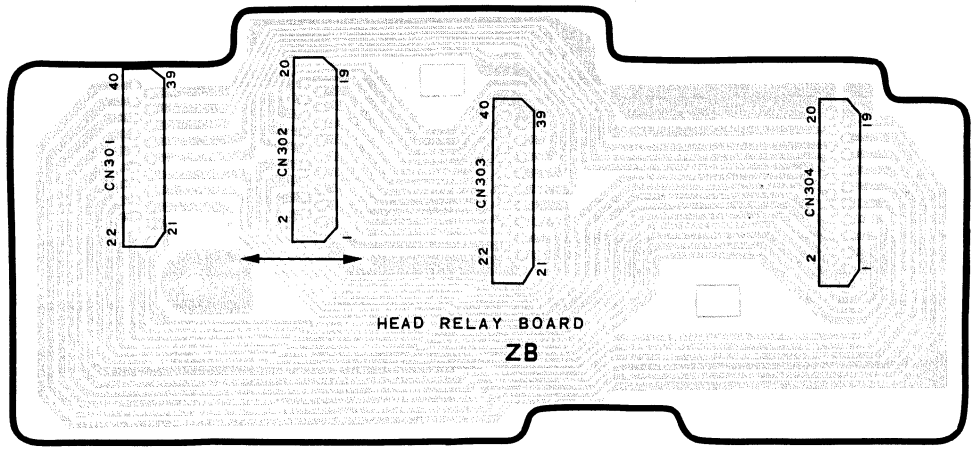


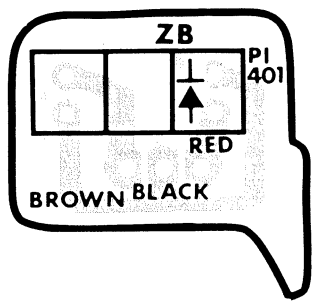


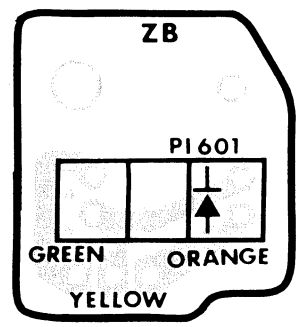


(Parts Side View)

| Ref.No. | Parts No. | Parts Name and Description | Per Set | Remarks |
|---|---|---|---|---|
| CN301-304 | PJJS397Z | Connecter | 4 | |
| CN401 | PJJS489Z | Connecter | 1 | |
| CN601 | PJJS490Z | Connecter | 1 | |
| PI401 | PJVSSX1041 | Photo Interrupter | 1 | |
| PI601 | PJSSX1041 | Photo Interrupter | 1 | |
| 1 | PJUP401Z-c | Head Relay Terminal Board Bare PCB | 1 | |
| 2 | PJUP401Z-d | Rear/Bottom Paper End Sensor Board Bare PCB | 1 | |
| 3 | PJUP401Z-e | Friction Paper End Sensor Board Bare PCB | 1 | |
| **Packing Materials** | | | | |
| P1 | PJQX6160Z | Instruction Book (English) | 1 | |
| P2 | PJPG844Z | CartonBox | 1 | |
| P3 | PJPN303Y | Pad (L) | 1 | |
| P4 | PJPN304Y | Pad (R) | 1 | |
| P5 | PJPE201Z | Soft Sheet | 1 | |
| P6 | PJQX6215Z | Instruction Book (French) [F] | 1 | |
| P6 | PJQX6216Z | Instruction Book (Italian) [I] | 1 | |
| P6 | PJQX6217Z | Instruction Book (Dutch) [O] [V] | 1 | |
| P6 | PJQX6218Z | Instruction Book (Simplified French) [V] | 1 | |
| P6 | PJQX6219Z | Instruction Book (Spanish) [SP] | 1 | |

ORDER NO.KM69107061T0

# Technical Information

Printer

# KX-P1123

**Purpose : To provide easy access of Main PCB during repair**

Extension cables are available to provide easy access of the Main PCB during testing and trouble-shooting procedures. Use of these extensions will require the removal of the following parts from the printer :

| | |
|---|---|
| Top Cover | Front Panel |
| Smoked Plastic Cover | Upper Cabinet |

## ■ Attaching of the Extension Cables

1) Remove the Mechanical Chassis Unit from the Bottom Cabinet.
2) Remove the Main PCB . Place this board at the right outside of the Bottom Cabinet as shown in the Figure below.
3) Place the Mechanical Chassis Unit back to its original position in the Bottom Cabinet.
4) Attach the Extension Cables to the Mechanical Chassis Unit, Main PCB, Head Relay Terminal, Front Panel and Power Transformer.

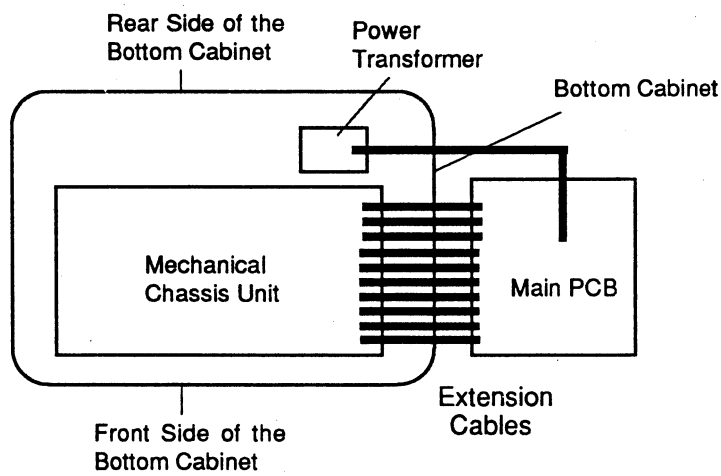


## ■ Extension Cable Parts List

| Ref. No. | Cable Number | Cable Name & Description | | | Per Unit | Remarks |
|---|---|---|---|---|---|---|
| EX1 | PJWX1P1180M | Extension Cable | : | CN1, Power | 1 | |
| EX2 | PJWX2P1180M | Extension Cable | : | CN5, F/T SW | 1 | |
| EX3 | PJWX3P1180M | Extension Cable | : | CN6, Bail | 1 | |
| EX4 | PJWX4P1180M | Extension Cable | : | CN4, Home | 1 | |
| EX5 | PJWX5P1180M | Extension Cable | : | CN3, F PE | 1 | |
| EX6 | PJWX6P1180M | Extension Cable | : | CN2, T PE | 1 | |
| EX7 | PJWX7P1180M | Extension Cable | : | CN11, LF | 1 | |
| EX8 | PJWX8P1180M | Extension Cable | : | CN12, CR | 1 | |
| EX9 | PJJE236Z | Flat Cable | : | CN7, Head | 1 | |
| EX10 | PJJE237Z | Flat Cable | : | CN8, Head | 1 | |
| EX11 | PJJE238Z | Flat Cable | : | CN13, Panel | 1 | |

Panasonic